ALLOWABLE CRITICAL-VALUE OF BEARING CHAMFER

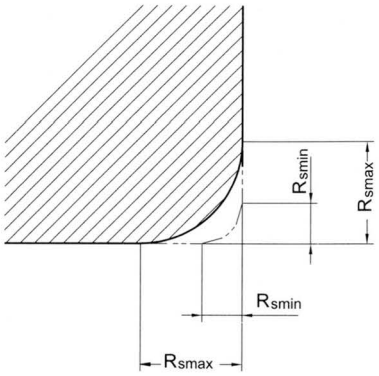

Radial Bearing
(Except Tapered Roller Bearings)

Unit : μm

Rs min	Nominal bore diameter d		Rs max	
	over	incl.	Radial direction	Axial direction
0.05	-	-	0.1	0.2
0.08	-	-	0.16	0.3
0.10	-	-	0.2	0.4
0.15	-	-	0.3	0.6
0.20	-	-	0.5	0.8
0.30	-	40	0.6	1
	40		0.8	1
0.60	-	40	1	2
	40		1.3	2
1.00	-	50	1.5	3
	50		1.9	3
1.10	-	120	2	3.5
	120		2.5	4

Radial Bearing
(Except Tapered Roller Bearings)

Unit : μm

Rs min	Nominal bore diameter d		Rs max	
	over	incl.	Radial direction	Axial direction
1.50	-	120	2.3	4
	120	-	3	5
2.00	-	80	3	4.5
	80	220	3.5	5
	220	-	3.8	6
2.10	-	280	4	6.5
	280	-	4.5	7
2.50	-	100	3.8	6
	100	280	4.5	6
	280	-	5	7
3.00	-	280	5	8
	280	-	5.5	8
4.00	-	-	6.5	9
5.00	-	-	8	10

ALLOWABLE CRITICAL-VALUE OF BEARING CHAMFER

Tapered Roller Bearings
(METRIC SIZE)

Unit : mm

rs min or ris max	Nominal bore diameter of bearing "d" of nominal outside diameter "D"		Rs max or Ris max	
	over	incl.	Radial direction	Axial direction
0.3	-	40	0.7	1.4
	40	-	0.9	1.6
0.6	-	40	1.1	1.7
	40	-	1.3	2.0
1.0	-	50	1.6	2.5
	50	-	1.9	3.0
1.5	-	120	2.3	3.0
	120	250	2.8	3.5
	250	-	3.5	4.0
2.0	-	120	2.8	4.0
	120	150	3.5	4.5
	250	-	4.0	5.0
2.5	-	120	3.5	5.0
	120	250	4.0	5.5
	250	-	4.5	6.0
3.0	-	120	4.0	5.5
	120	250	4.5	6.5
	250	400	5.0	7.0
	400	-	5.5	7.5
4.0	-	120	5.0	7.0
	120	250	5.5	7.5
	250	400	6.0	8.0
	400	-	6.5	8.5
5.0	-	180	6.5	8.0
	180	-	7.5	9.0
6.0	-	180	7.5	10.0
	180	-	9.0	11.0

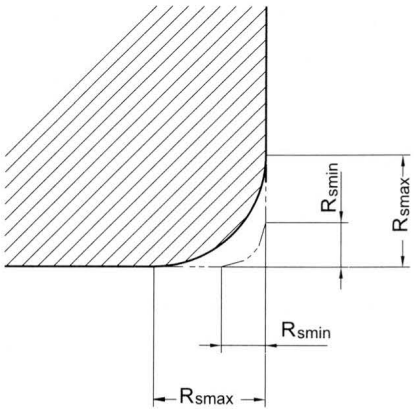

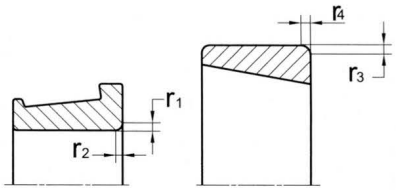

Tapered Roller Bearings
(INCH SIZE)

Unit : mm

Nominal bearing bore diameter d		Maximum values	
		r1 max	r2 max
over	incl.		
-	50.8	rs min +0.4	rs min +0.9
50.8	101.6	rs min +0.5	rs min +1.3
101.6	254	rs min +0.6	rs min +1.6
Nominal bearing outside diameter D		**Maximum values**	
		r3 max	r4 max
over	incl.		
-	101.6	rs min +0.6	rs min +1.1
101.6	168.3	rs min +0.6	rs min +1.2
168.3	266.7	rs min +0.8	rs min +1.4

BEARING INTERNAL CLEARANCE

Radial internal clearance of deep groove ball bearings

Under zero measuring load — Unit : μm

bore diameter d(mm)		C2		Normal		C3		C4		C5	
over	incl.	min	max	min	max	min	max	min	max	min	max
2.5	10	0	7	2	13	8	23	14	29	20	37
10	18	0	9	3	18	11	25	18	33	25	45
18	24	0	10	5	20	13	28	20	36	28	48
24	30	1	11	5	20	13	28	23	41	30	53
30	40	1	11	6	20	15	33	28	46	40	64
40	50	1	11	6	23	18	36	30	51	45	73
50	65	1	15	8	28	23	43	38	61	55	90
65	80	1	15	10	30	25	51	46	71	65	105
80	100	1	18	12	36	30	58	53	84	75	120
100	120	2	20	15	41	36	66	61	97	90	140
120	140	2	23	18	48	41	81	71	114	105	160
140	160	2	23	18	53	46	91	81	130	120	180
160	180	2	25	20	61	53	102	91	147	135	200
180	200	2	30	25	71	63	117	107	163	150	230
200	225	4	32	28	82	73	132	120	187	175	255

Radial internal clearance of deep groove ball bearings based on measure load

Bore diameter d (mm)		Measuring load N (kg)	Radial clearance increase (μm)		
over	incl.		C2	C0	C3, C4, C5
10	18	24.5(2.5)	3-4	4	4
18	50	49 (5)	4-5	5	6
50	200	147 (15)	6-8	8	9

Radial internal clearance of bearings for electric motor

Unit : μm

Bore diameter d (mm)		Radial internal clearance CM			
		Deep groove ball bearings		Cylindrical roller bearing	
over	incl.	min	max	min	max
10	18	4	11	-	-
18	24	5	12	-	-
24	30	5	12	15	30
30	40	9	13	15	30
40	50	9	17	20	35
50	65	12	22	25	40
65	80	12	22	30	45
80	100	18	30	35	55
100	120	18	30	35	60

Radial internal clearance of self-aligning ball bearings

Unit : μm

Bore diameter d(mm)		C2		Normal		C3		C4	
over	incl.	min	max	min	max	min	max	min	max
Bearings with cylindrical bore									
2.5	6	1	8	5	15	10	20	15	25
6	10	2	9	6	17	12	25	19	33
10	14	2	10	6	19	13	26	21	35
14	18	3	12	8	21	15	20	23	37
18	24	4	14	10	23	17	30	25	39
24	30	5	16	11	24	19	35	29	46
30	40	6	18	13	29	23	40	34	53
40	50	6	19	14	31	25	44	37	57
50	65	7	21	16	36	30	50	45	69
65	80	8	24	18	40	35	60	54	83
80	100	9	27	22	48	42	70	64	96
Bearings with tapered bore									
18	24	7	17	13	26	20	33	28	42
24	30	9	20	15	28	23	39	33	50
30	40	12	24	19	35	29	46	40	59
40	50	14	27	22	39	33	52	45	65
50	65	18	32	27	47	41	61	56	80
65	80	23	39	35	57	50	75	69	98
80	100	29	47	42	68	62	90	84	116

Radial internal clearance of magneto ball bearing

Unit : μm

Bore diameter d(mm)		C2		Normal	
over	incl.	min	max	min	max
2.5	10	10	40	20	50
10	30	20	50	30	60

Radial internal clearance of miniature ball bearing

Unit : μm

Clearance symbols	Radial clearance	
	min	max
M1	0	5
M2	3	8
M3	5	10
M4	8	13
M5	13	20
M6	20	28

BEARING TOLERANCE

Tolerance Symbols

- Δdmp : Single plane mean bore diameter deviation
- Δds : Deviation of single bore diameter
- V_{dp} : Bore diameter variation in a single radial plane
- V_{dmp} : Mean bore diameter variation
- K_{ia} : Radial runout of assembled bearing inner ring
- S_{ia} : Side face runout with reference to raceway of assembled bearing inner ring
- S_d : Side face runout with reference to bore of inner ring
- ΔB_s : Deviation of a single width of the inner ring
- V_{BS} : Inner ring width variation
- ΔD_{mp} : Single plane mean outside diameter deviation
- ΔD_s : Deviation of a single outside diameter
- V_{dp} : Outside diameter variation in a single radial plane
- V_{Dmp} : Mean outside diameter variation
- K_{ea} : Radial runout of assembled bearing outer ring
- S_{ea} : Side face runout with reference to raceway of assembled bearing outer ring
- S_D : Variation in inclination of outside cylindrical surface to outer ring side face
- ΔC_s : Deviation of a single wigth of the outer ring
- V_{cs} : Outer ring width variation

Class 0 tolerances for radial bearings (except tapered roller bearings)

Inner ring — **Unit : µm**

d (mm)		Δ dmp		Vdp Diameter Series			Vdmp	Δ Bs		Δ B1s		VBS	Kia
				8,9	0,1	2, 3, 4							
over	incl.	high	low	max	max	max	max	high	low	high	low	max	max
2.5	10	0	-8	10	8	6	6	0	-120	0	-250	15	10
10	18	0	-8	10	8	6	6	0	-120	0	-250	20	10
18	30	0	-10	13	10	8	8	0	-120	0	-250	20	13
30	50	0	-12	15	12	9	9	0	-120	0	-250	20	15
50	80	0	-15	19	19	11	11	0	-150	0	-380	25	20
80	120	0	-20	25	25	15	15	0	-200	0	-380	25	25
120	180		-25	31	31	19	19	0	-250	0	-500	30	30
180	250	0	-30	38	38	23	23	0	-300	0	-500	30	40
250	315	0	-35	44	44	26	26	0	-350	0	-500	35	50

Outer ring — **Unit : µm**

D (mm)		Δ Dmp		Vdp Diameter Series			Bearings with shields or seals	VDmp	Δ Cs1 Δ C1s V CS	Kea
				8,9	0,1	2, 3, 4				
over	incl.	high	low	max	max	max	max	max		max
6	18	0	-8	10	8	6	10	6	Values are identical to those for inner ring of same bearing. (ΔBs ΔB1s VBS)	15
18	30	0	-9	12	9	7	12	7		15
30	50	0	-11	14	11	8	16	8		20
50	80	0	-13	16	13	10	20	10		25
80	120	0	-15	19	19	11	26	11		35
120	150	0	-18	23	23	14	30	14		40
150	180	0	-25	31	31	19	38	19		45
180	250	0	-30	38	38	23	-	23		50
250	315	0	-35	44	44	26	-	26		60
315	400	0	-40	50	50	30	-	30		70

BEARING TOLERANCE

■ *Tolerances for Tapered Roller Bearings (METRIC SIZE)*

Inner Ring and Bearing Width

unit : μm

d (mm)		Δdmp		Vdp	Vdmp	ΔBs		Kia	ΔTs		ΔT1s		ΔT2s	
over	incl.	high	low	max	max	high	low	max	high	low	high	low	high	low
18	30	0	-12	12	9	0	-120	18	+200	0	+100	0	+100	0
30	50	0	-12	12	9	0	-120	20	+200	0	+100	0	+100	0
50	80	0	-15	15	11	0	-150	25	+200	0	+100	0	+100	0
80	120	0	-20	20	15	0	-200	30	+200	-200	+100	-100	+100	-100

■ *Tolerances for Tapered Roller Bearings (METRIC SIZE)*

Outer Ring and Bearing Width

unit : μm

D (mm)		ΔDmp		VDp	VDmp	ΔCs	Kea
over	incl.	high	low	max	max		max
30	50	0	-14	14	11	Values are identical to those for inner ring of same bearing (ΔBs)	20
50	80	0	-16	16	12		25
80	120	0	-18	18	14		35
120	150	0	-20	20	15		40
150	180	0	-25	25	19		45

■ *Tolerances for Tapered Roller Bearings (INCH SIZE)*

Inner Ring and Bearing Width

unit : μm

d (mm)		Δds		ΔTs	
over	incl.	high	low	high	low
-	76.2	+13	0	+203	0
76.2	101.6	+25	0	+356	-254
101.6	266.7	+25	0	+356	-254

■ *Tolerances for Tapered Roller Bearings (INCH SIZE)*

Outer Ring and Bearing Width

unit : μm

D (mm)		ΔDs		Kia1 Ksa1 Sia Sea
over	incl.	high	low	max
-	266.7	+25	0	51
266.7	304.8	+25	0	51
304.8	609.6	+51	0	51

BEARING TOLERANCE

■ *Tolerances for Thrust Bearings*

Shaft washer — **Unit : μm**

d (mm)		Tolerance class 0 , 6 , 5			Tolerance class 0	6	5	Bearing high ΔTs	
		Δdmp		Vdp	Si	Si	Si		
over	incl.	high	low	max	max	max	max	high	low
-	18	0	-8	6	10	5	3	+20	-250
18	30	0	-10	8	10	5	3	+20	-250
30	50	0	-12	9	10	6	3	+20	-300
50	80	0	-15	11	10	7	4	-	-
80	120	0	-20	15	15	8	4	+25	-300
120	180	0	-25	19	15	9	5	+25	-400

Housing washer — **Unit : μm**

D (mm)		Tolerance class 0, 6, 5			
		ΔDmp		VDp	Se
over	incl.	high	low	max	
18	30	0	-13	10	Values are identical to those for shaft washer of same bearing(Si)
30	50	0	-16	12	
50	80	0	-19	14	
80	120	0	-22	17	
120	180	0	-25	19	
180	250	0	-30	23	

Outer rings — **Unit : μm**

Nominal outside diameter D (mm)		ΔDmp				VDp		Se2
		Class 0, 6, 5		Class 4		Class 0, 6, 5	Class 4	Class 0, Class 6, Class 5, Class 4
over	incl.	high	low	high	low	max		max
10	18	0	-11	0	-7	8	5	According to the tolerance of S1 against "d" or "d2" of the same bearings.
18	30	0	-13	0	-8	10	6	
30	50	0	-16	0	-9	12	7	
50	80	0	-19	0	-11	14	8	
80	120	0	-22	0	-13	17	10	
120	180	0	-25	0	-15	19	11	
180	250	0	-30	0	-20	23	15	
250	315	0	-35	0	-25	26	19	
315	400	0	-40	0	-28	30	21	
400	500	0	-45	0	-33	34	25	
500	630	0	-50	0	-38	38	29	
630	800	0	-75	0	-45	55	34	

2) To be applied only for bearings with flat

BEARING TOLERANCE

Class 0 Tolerance and Alloweable Values of Tapered Hole of Radial Bearings

Unit : μm

Nominal bore Diameter d(mm)		Δdmp		Δd1mp - Δdmp		Vdp
over	incl.	high	low	high	low	max
-	10	+15	0	+15	0	10
10	18	+18	0	+18	0	10
18	30	+21	0	+21	0	13
30	50	+25	0	+25	0	15
50	80	+30	0	+30	0	19
80	120	+35	0	+35	0	25
120	180	+40	0	+40	0	31
180	250	+46	0	+46	0	38
250	315	+52	0	+52	0	44

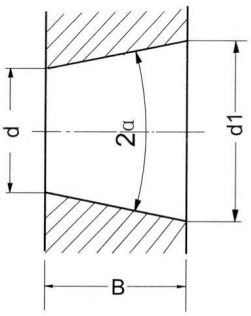

Theoretical tapered hole

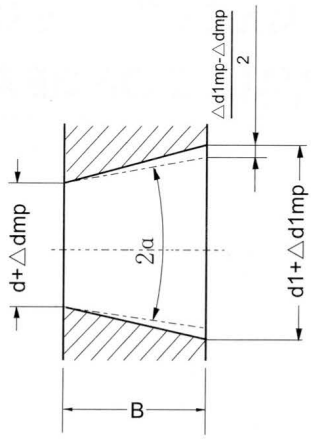

Tapered hole having dimensional difference of the average bore diameter within the flat surface

EQUIVALENCE

Conversion

Length	1mm = 0.039 In. 1 In. = 25.4 mm
Mass	1 kg = 2.205 Lbs
Force	1 N = 0.225 lbf 1 lbf = 4.45 N
Moment	1Nmm = 0.009 In.lbf 1In.lbf = 113 Nmm 1Nm = 8.85 In.lbf 1 In.lbf = 0.133 Nm
Power	1 W = 0.00136 HP 1 HP = 736 W
Pressure	1 MPa = 1 N/mm^2 = 145 psi 1 psi = 0.007 N/mm^2 = 0.007 MPa
Kinematic viscosity	1 mm^2 /s = 1 cSt

Conversion

Shaft Size		
Inch		
1/2"	8	008
5/8"	10	010
3/4"	12	012
7/8"	14	014
15/16"	15	015
1.00"	16	100
1-1/16"	17	101
1-1/8"	18	102
1-3/16"	19	103
1-1/4"	20	104
1-5/16"	21	105
1-3/8"	22	106
1-7/16"	23	107
1-1/2"	24	108
1-9/16"	25	109
1-5/8"	26	110

Conversion

Shaft Size		
Inch		
1-11/16"	27	111
1-3/4"	28	112
1-7/8"	30	114
1-15/16"	31	115
2.00	32	200
2-1/8"	34	202
2-3/16"	35	203
2-1/4"	36	204
2-3/8"	38	206
2-7/16"	39	207
2-1/2"	40	208
2-11/16"	43	211
2-3/4"	44	212
2-15/16"	47	215
3.00"	48	300

CONVERSION TABLE

Inch-Millimetre Conversion Table

1 inch = 25.400 mm

Inch		O	1	2	3	4	5	6	7	8	9
Franction	Decimal										
			25.400	50.800	76.200	101.600	127.000	152.400	177.800	203.200	228.600
1/64	0.015625	0.397	25.797	51.197	76.597	101.997	127.397	152.797	178.197	203.597	228.997
1/32	0.031250	0.794	26.194	51.594	76.994	102.394	127.794	153.194	178.594	203.994	229.394
3/64	0.046875	1.191	26.591	51.991	77.391	102.791	128.191	153.591	178.991	204.391	229.791
1/16	0.062500	1.588	26.988	52.388	77.788	103.188	128.588	153.988	179.388	204.788	230.188
5/64	0.078125	1.984	27.384	52.784	78.184	103.584	128.984	154.384	179.784	205.184	230.584
3/32	0.093750	2.381	27.781	53.181	78.581	103.981	129.381	154.781	180.181	205.581	230.981
7/64	0.109375	2.778	28.178	53.578	78.978	104.378	129.778	155.178	180.578	205.978	231.378
1/8	0.125000	3.175	28.575	53.975	79.375	104.775	130.175	155.575	180.975	206.375	231.775
9/64	0.140625	3.572	28.972	54.372	79.772	105.172	130.572	155.972	181.372	206.772	232.172
5/32	0.156250	3.969	29.369	54.769	80.169	105.569	130.969	156.369	181.769	207.169	232.569
11/64	0.171875	4.366	29.766	55.166	80.566	105.966	131.366	156.766	182.166	207.566	232.966
3/16	0.187500	4.763	30.163	55.563	80.963	106.363	131.763	157.163	182.563	207.963	233.363
13/64	0.203125	5.159	30.559	55.959	81.359	106.759	132.159	157.559	182.959	208.359	233.759
7/32	0.218750	5.556	30.956	56.356	81.756	107.156	132.556	157.956	183.356	208.756	234.156
15/64	0.234375	5.953	31.353	56.753	82.153	107.553	132.953	158.353	183.753	209.153	234.553
1/4	0.250000	6.350	31.750	57.150	82.550	107.950	133.350	158.750	184.150	209.550	234.950
17/64	0.265625	6.747	32.147	57.547	82.947	108.347	133.747	159.147	184.547	209.947	235.347
9/32	0.281250	7.144	32.544	57.944	83.344	108.744	134.144	159.544	184.944	210.344	235.744
19/64	0.296875	7.541	32.941	58.341	83.741	109.141	134.541	159.941	185.341	210.741	236.141
5/16	0.312500	7.938	33.338	58.738	84.138	109.538	134.938	160.338	185.738	211.138	236.538
21/64	0.328125	8.334	33.734	59.134	84.534	109.934	135.334	160.734	186.134	211.534	236.934
11/32	0.343750	8.731	34.131	59.531	84.931	110.331	135.731	161.131	186.531	211.931	237.331
23/64	0.359375	9.128	34.528	59.928	85.328	110.728	136.128	161.528	186.928	212.328	237.728
3/8	0.375000	9.525	34.925	60.325	85.725	111.125	136.525	161.925	187.325	212.725	238.125
25/64	0.390625	9.922	35.322	60.722	86.122	111.522	136.922	162.322	187.722	213.122	238.522
13/32	0.406250	10.319	35.719	61.119	86.519	111.919	137.319	162.719	188.119	213.519	238.919
27/64	0.421875	10.716	36.116	61.516	86.916	112.316	137.716	163.116	188.516	213.916	239.316
7/16	0.437500	11.113	36.513	61.913	87.313	112.713	138.113	163.513	188.913	214.313	239.713
29/64	0.453125	11.509	36.909	62.309	87.709	113.109	138.509	163.909	189.309	214.709	240.109
15/32	0.468750	11.906	37.306	62.706	88.106	113.506	138.906	164.306	189.706	215.106	240.506
31/64	0.484375	12.303	37.703	63.103	88.503	113.903	139.303	164.703	190.103	215.503	240.903
1/2	0.500000	12.700	38.100	63.500	88.900	114.300	139.700	165.100	190.500	215.900	241.300
33/64	0.515625	13.097	38.497	63.897	89.297	114.697	140.097	165.497	190.897	216.297	241.697
17/32	0.531250	13.494	38.894	64.294	89.694	115.094	140.494	165.894	191.294	216.694	242.094
35/64	0.546875	13.891	39.291	64.691	90.091	115.491	140.891	166.291	191.691	217.091	242.491
9/16	0.562500	14.288	39.688	65.088	90.488	115.888	141.288	166.688	192.088	217.488	242.888
37/64	0.578125	14.684	40.084	65.484	90.884	116.284	141.684	167.084	192.484	217.884	243.284
19/32	0.593750	15.081	40.481	65.881	91.281	116.681	142.081	167.481	192.881	218.281	243.681
39/64	0.609375	15.478	40.878	66.278	91.678	117.078	142.478	167.878	193.278	218.678	244.078
5/8	0.625000	15.875	41.275	66.675	92.075	117.475	142.875	168.275	193.675	219.075	244.475
41/64	0.640625	16.272	41.672	67.072	92.472	117.872	143.272	168.672	194.072	219.472	244.872
21/32	0.656250	16.669	42.069	67.469	92.869	118.269	143.669	169.069	194.469	219.869	245.269
43/64	0.671875	17.066	42.466	67.866	93.266	118.666	144.066	169.466	194.866	220.266	245.666
11/16	0.687500	17.463	42.863	68.263	93.663	119.063	144.463	169.863	195.263	220.663	246.063
45/64	0.703125	17.859	43.259	68.659	94.059	119.459	144.859	170.259	195.659	221.059	246.459
23/32	0.718750	18.256	43.656	69.056	94.456	119.856	145.256	170.656	196.056	221.456	246.856
47/64	0.734375	18.653	44.053	69.453	94.853	120.253	145.653	171.053	196.453	221.853	247.253
3/4	0.750000	19.050	44.450	69.850	95.250	120.650	146.050	171.450	196.850	222.250	247.650
49/64	0.765625	19.447	44.847	70.247	95.647	121.047	146.447	171.847	197.247	222.647	248.047
25/32	0.781250	19.844	45.244	70.644	96.044	121.444	146.844	172.244	197.644	223.044	248.444
51/64	0.796875	20.241	45.641	71.041	96.441	121.841	147.241	172.641	198.041	223.441	248.841
13/16	0.812500	20.638	46.038	71.438	96.838	122.238	147.638	173.038	198.438	223.838	249.238
53/64	0.828125	21.034	46.434	71.834	97.234	122.634	148.034	173.434	198.834	224.234	249.634
27/32	0.843750	21.431	46.831	72.231	97.631	123.031	148.431	173.831	199.231	224.631	250.031
55/64	0.859375	21.828	47.228	72.628	98.028	123.428	148.828	174.228	199.628	225.028	250.428
7/8	0.875000	22.225	47.625	73.025	98.425	123.825	149.225	174.625	200.025	225.425	250.825
57/64	0.890625	22.622	48.022	73.422	98.822	124.222	149.622	175.022	200.422	225.822	251.222
29/32	0.906250	23.019	48.419	73.819	99.219	124.619	150.019	175.419	200.819	226.219	251.619
59/64	0.921875	23.416	48.816	74.216	99.616	125.016	150.416	175.816	201.216	226.616	252.016
15/16	0.937500	23.813	49.213	74.613	100.013	125.413	150.813	176.213	201.613	227.013	252.413
61/64	0.953125	24.209	49.609	75.009	100.409	125.809	151.209	176.609	202.009	227.409	252.809
31/32	0.968750	24.606	50.006	75.406	100.806	126.206	151.606	177.006	202.406	227.806	253.206
63/64	0.984375	25.003	50.403	75.803	101.203	126.603	152.003	177.403	202.803	228.203	253.603

LUBRICATION

■ *Lubrication*

As Bearings in ***KML*** bearing units have sufficient high-grade grease sealed in at the time of manufacture, there is no need for replenishment while in use. The amount of grease necessary for lubrication is, in general, very small. With the ***KML*** bearing units, the amount of grease occupies about a half to a third of the space inside the bearing.

■ *Re-greasing*

The performance of a bearing is greatly influenced by the quality of grease. In order to avoid over-filling, it is advisable to replenish the grease while the machine is in operation. Continue to insert grease until a little oozes out from between the outer ring raceway and the periphery of the slinger, for optimum performance.

■ Although bearing units are relubricable, grease relubrication is not always required according to operating condition.
where environments are clean and operating temperature does not rise high, supplement of the grease may not be required like ordinary bearings, however, the grease becomes deteriorated in any operating condition and regular relubrication is necessarily required where operating condition is humid or rise of temperature is high.

Operating temperature of bearing		Greasing interval		
		Environmental condition		
°C	°F	Clean	Dirty	Very Dirty Heavily humid
50	122	3 years	6 months	3 months
70	158	1 years	2 months	1 month
100	212	3 months	2 weeks	1 week
120	248	6 weeks	1 week	3 days
150	302	2 weeks	3 days	Daily

MATERIAL OF BEARING RINGS AND BALLS

The ***KML*** bearing rings and balls are made of high carbon chromium steel GCr15 which has a chemical composition equivalent to SAE 52100.

Steel No.	C	Cr	Si	Mn	S	P
GCr15	0.95-1.05%	1.30-1.65%	0.15-0.35%	0.20-0.40%	≤0.020%	≤0.027%
SAE 52100	0.98-1.10%	1.30-1.60%	0.15-0.30%	0.25-0.45%	≤0.025%	≤0.025%

The hardness for bearing rings is HRC 59-64 and HRC 60-65 for steel balls

LUBRICANT - GREASES

Brand name	Manufacturer	Soap type or thickener	Dropping point °C	NLGI No.	Operating temperature range °C	Application
ALVANIA No. 2	SHELL	lithium	180	2	-25~+110	
ALVANIA No. 3	SHELL	lithium	180	3	-25~+110	For general purpose
ANDOK B	ESSO	sodium-complex	245	2-3	-30~+120	For high speed
ANDOK C	ESSO	sodium-complex	>260	3-4	-20~+120	
BEACON 325	ESSO	lithium		2	-54~+120	For low temperature and small bearing
UNIREX N2	ESSO	lithium-complex	304	2	-40~+200	For high temperature
CHEVRON SRI-2	CHEVRON	Poly-UREA	243	2	-30~+150	For high speed and high temperature
MOBIL *22	MOBIL	lithium	192	2	-55~+120	
ISOFLEX LDS18	KLUBER	lithium	>190	2	-50~+120	For small bearing. For high speed
MULTI-TEMP LRL#2	KYODO YUSHI	lithium	208		-35~+150	For high temperature
MULTI-TEMP PS-2	KYODO YUSHI	lithium	189		-50~+110	For low temperature
G40M	SHINESTU	Metalic	OVER 200		-30~+170	For high temperature

MAXIMUM PERMISSIBLE SPEED OF ROTATION

The maximum speed possible while ensuring the safety and long life of ball bearings used in the units is shown in figure below.

■ ***Limiting Speed of Bearing Units***

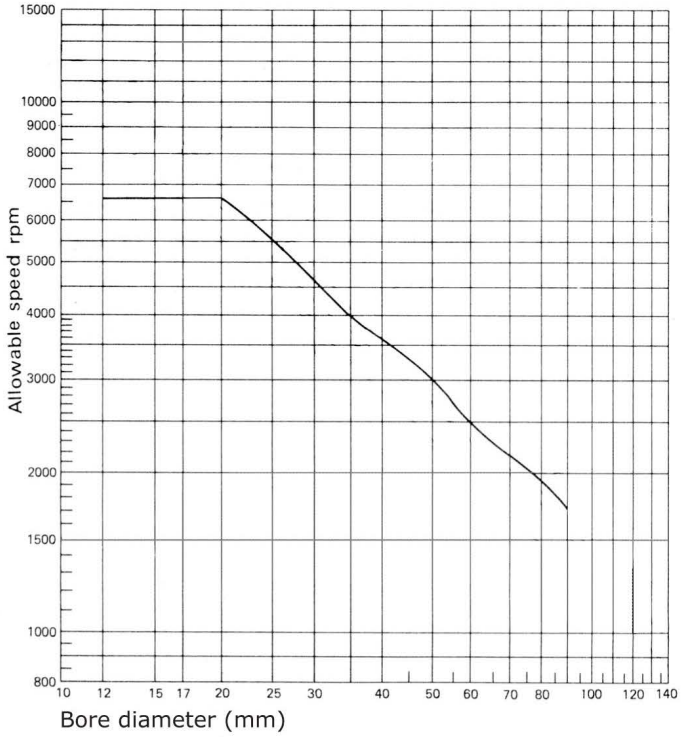

SNAP RING FOR BEARING WITH SNAP RING GROOVE ON OUTER RING

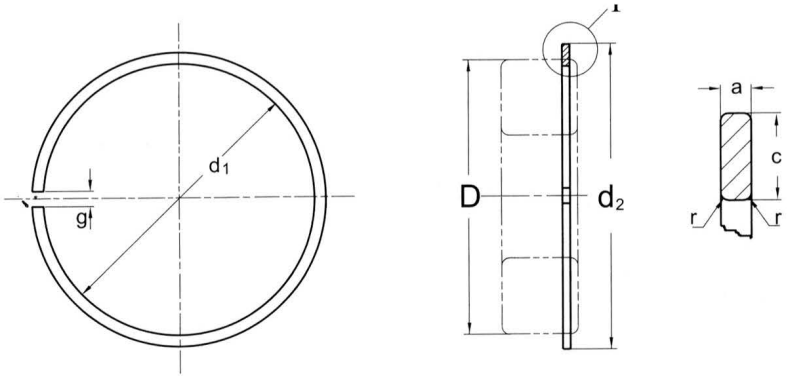

Unit : (mm)

d1	Unmounted permissible deviation	g	D	a -0.10	C -0.15	Mounted d2 max	r min	Designation
27.4	+0.4	3	30	1.12	3.25	34.7	0.4	SP 30
29.4	+0.4	3	32	1.12	3.25	36.7	0.4	SP 32
32.4	+0.4	3	35	1.12	3.25	39.7	0.4	SP 35
34.0	+0.4	3	37	1.12	3.25	41.3	0.4	SP 37
37.3	+0.4	3	40	1.12	3.25	44.6	0.4	SP 40
38.9	+0.5	3	42	1.12	3.25	46.3	0.4	SP 42
43.7	+0.5	4	47	1.12	4.04	52.7	0.4	SP 47
46.7	+0.5	4	50	1.12	4.04	55.7	0.4	SP 50
48.8	+0.5	4	52	1.12	4.04	57.9	0.4	SP 52
51.7	+0.5	4	55	1.12	4.04	60.7	0.4	SP 55
52.4	+0.8	4	56	1.12	4.04	61.7	0.4	SP 56
54.4	+0.8	4	58	1.12	4.04	63.7	0.4	SP 58
58.2	+0.8	4	62	1.70	4.04	67.7	0.6	SP 62
61.2	+0.8	4	65	1.70	4.04	70.7	0.6	SP 65
63.4	+0.8	5	68	1.70	4.85	74.6	0.6	SP 68
67.4	+0.8	5	72	1.70	4.85	78.6	0.6	SP 72
70.4	+0.8	5	75	1.70	4.85	81.6	0.6	SP 75
75.4	+0.8	5	80	1.70	4.85	86.6	0.6	SP 80
80.4	+0.8	5	85	1.70	4.85	91.6	0.6	SP 85
85.4	+0.8	5	90	2.46	4.85	96.5	0.7	SP 90
90.4	+0.8	5	95	2.46	4.85	101.6	0.7	SP 95
95.2	+1.0	5	100	2.46	4.85	106.5	0.7	SP 100
105.2	+1.0	5	110	2.46	4.85	116.6	0.7	SP 110
110.2	+1.0	5	115	2.46	4.85	121.6	0.7	SP 115
113.6	+1.0	7	120	2.82	7.21	129.7	0.7	SP 120
118.6	+1.0	7	125	2.82	7.21	134.7	0.7	SP 125
123.6	+1.0	7	130	2.82	7.21	139.7	0.7	SP 130
133.0	+1.6	7	140	2.82	7.21	149.7	0.7	SP 140
138.0	+1.6	7	145	2.82	7.21	154.7	0.7	SP 145
142.9	+1.6	7	150	2.82	7.21	159.7	0.7	SP 150

SNAP RING GROOVE ON OUTER RING

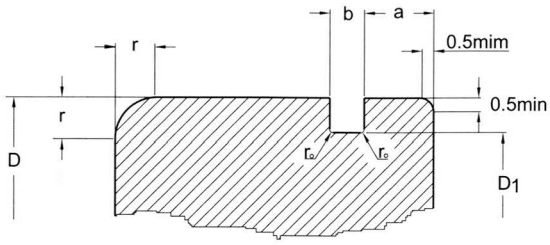

Unit : (mm)

D	D1	Permissible deviation	a Diameter series 60, 160	a Diameter series 62, 63, 64	Permissible deviation	b	Permissible deviation	ro	Permissible deviation
30	28.2	-0.25	-	2.06	-0.15	1.35	+0.30	0.4	-0.20
32	30.2		2.06	2.06		1.35		0.4	
35	33.2		2.06	2.06		1.35		0.4	
37	34.8		-	2.06		1.35		0.4	
40	38.10		-	2.06		1.35		0.4	
42	39.8		2.06	2.06		1.35		0.4	
47	44.60		2.06	2.46		1.35		0.4	
50	47.60		-	2.46		1.35		0.4	
52	49.7		2.06	2.46		1.35		0.4	
55	52.60		2.06	-		1.35		0.4	
56	53.60		-	2.46		1.35		0.4	
58	55.60		2.06	2.46		1.35		0.4	
62	59.6	-0.50	2.06	3.28	-0.20	1.9		0.6	-0.30
65	62.60		-	3.28		1.9		0.6	
68	64.8		2.49	3.28		1.9		0.6	
72	68.8		-	3.28		1.9		0.6	
75	71.8		2.49	3.28		1.9		0.6	
80	76.8		2.49	3.28		1.9		0.6	
85	81.8		-	3.28		1.9		0.6	
90	86.8		2.87	3.28		2.7		0.6	
95	91.8		2.87	-		2.7		0.6	
100	96.80		2.87	3.28		2.7		0.6	
110	107		2.87	3.28		2.7		0.6	
115	112		2.87	-		2.7		0.6	
120	115		-	4.06		3.1		0.6	
125	120		2.87	4.06	-0.25	3.1		0.6	
130	125		2.87	4.06		3.1		0.6	
140	135		3.71	4.90		3.1		0.6	
145	140		3.71	-		3.1		0.6	
150	145		3.71	4.90		3.1		0.6	

TOLERANCES FOR SPHERICAL PLAIN BEARINGS

Inner Ring (GE, GEZ) Bearings

Bore Diameter d				Single Mean Bore Diameter, dmp (1)				Width B			
Inch		mm		Inch		mm		Inch		mm	
over	incl.	over	incl.	high	low	high	low	high	low	high	low
0.4375	2.0000	11.112	50.800	+0	-0.0005	+0	-0.013	+0	-0.005	+0	-0.13
2.0000	3.0000	50.800	76.200	+0	-0.0006	+0	-0.015	+0	-0.005	+0	-0.13
3.0000	4.7500	76.200	120.650	+0	-0.0008	+0	-0.020	+0	-0.005	+0	-0.13
4.7500	6.0000	120.650	152.400	+0	-0.0010	+0	-0.025	+0	-0.005	+0	-0.13

1) "Single Mean diameter" is defined as the mean diameter in a single radial plane.

Outer Ring (GE, GEZ) Bearings

Outside Diameter D				Single Mean Bore Diameter, dmp (1)				Width C			
Inch		mm		Inch		mm		Inch		mm	
over	incl.	over	incl.	high	low	high	low	high	low	high	low
0.8125	2.0000	20.638	50.800	+0	-0.0005	+0	-0.013	+0	-0.005	+0	-0.13
2.0000	3.1875	50.800	80.962	+0	-0.0006	+0	-0.015	+0	-0.005	+0	-0.13
3.1875	4.7500	80.962	120.650	+0	-0.0008	+0	-0.020	+0	-0.005	+0	-0.13
4.7500	7.0000	120.650	177.800	+0	-0.0010	+0	-0.025	+0	-0.005	+0	-0.13
7.0000	8.7500	177.800	222.250	+0	-0.0012	+0	-0.030	+0	-0.005	+0	-0.13

1) Tolerances apply before coating GE with MoS2 and fracturing GE outer ring.
"Single Mean diameter" is defined as the mean diameter in a single radial plane.

SHAFT FITS

For normal service, the shaft diameters listed in the dimension table produce recommended fits. The table below is to be used only for applications where a shaft interference fit is required.

Shaft Diameter Tolerance for Interference Fit (GE, GEZ) Bearings

Bore Diameter d				Shaft Tolerance m6			
mm		Inch		mm		Inch	
over	incl.	over	incl.	high	low	high	low
10	18	0.3937	0.7087	+0.018	+0.007	+0.0007	+0.0003
18	30	0.7087	1.1811	+0.021	+0.008	+0.0008	+0.0003
30	50	1.1811	1.9685	+0.025	+0.009	+0.0010	+0.0004
50	80	1.9685	3.1496	+0.030	+0.011	+0.0012	+0.0005
80	120	3.1496	4.7244	+0.035	+0.013	+0.0014	+0.0005
120	180	4.7244	7.0866	+0.040	+0.015	+0.0016	+0.0006
180	250	7.0866	9.8425	+0.046	+0.017	+0.0018	+0.0007
250	315	9.8425	12.4015	+0.052	+0.020	+0.0020	+0.0008

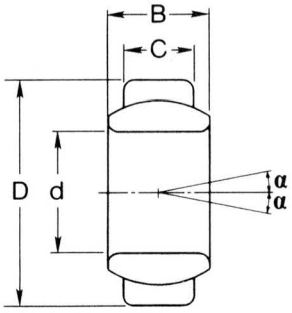

TOLERANCES OF BALL BEARINGS FOR MOUNTED UNITS

Cylindrical bore (UC, SER, SB, CSB, HC, SA, CSA)

Unit : μm/0.0001 inch

Nominal bore diameter d				Cylindrical bore						Radial runout K_{ia} (max.)
				Bore diameter				Width		
over		incl.		Δd_{mp} Deviations		Δd_s Deviations		ΔBi_{s1} ΔBe_s Deviations		
mm	inch	mm	inch	high	low	high	low	high	low	
10	*0.03937*	**18**	*0.7087*	**+18** *+ 7*	**0** *0*	**+22** *+ 9*	**-4** *-2*	**0** *0*	**-120** *- 47*	**15** *6*
18	*0.7087*	**30**	*1.1811*	**+21** *+ 8*	**0** *0*	**+25** *+10*	**-4** *-2*	**0** *0*	**-120** *- 47*	**18** *7*
30	*1.1811*	**50**	*1.9685*	**+25** *+10*	**0** *0*	**+30** *+12*	**-5** *-2*	**0** *0*	**-120** *- 47*	**20** *8*
50	*1.9685*	**80**	*3.1496*	**+30** *+12*	**0** *0*	**+36** *+14*	**-6** *-2*	**0** *0*	**-150** *- 59*	**25** *10*
80	*3.1496*	**120**	*4.7244*	**+35** *+14*	**0** *0*	**+42** *+17*	**-7** *-3*	**0** *0*	**-200** *- 79*	**30** *12*
120	*4.7244*	**180**	*7.0866*	**+40** *+16*	**0** *0*	**+48** *+19*	**-8** *-3*	**0** *0*	**-250** *- 98*	**35** *14*

Note : Symbols

Δdmp : Mean bore diameter deviation

ΔdS : Bore diameter deviation

$\Delta BiS1$: Inner ring width deviation

ΔBeS : Outer ring width deviation

Outer Ring

Unit : μm/0.0001 inch

Nominal outside diameter D				Mean outside diameter deviation ΔD_{mp}		Radial runout K_{ea} (max.)
over		incl.				
mm	inch	mm	inch	high	low	
30	*1.1811*	**50**	*1.9685*	**0** *0*	**-11** *- 4*	**20** *8*
50	*1.9685*	**80**	*3.1496*	**0** *0*	**-13** *- 5*	**25** *10*
80	*3.1496*	**120**	*4.7244*	**0** *0*	**-15** *- 6*	**35** *14*
120	*4.7244*	**150**	*5.9055*	**0** *0*	**-18** *- 7*	**40** *16*
150	*5.9055*	**180**	*7.0866*	**0** *0*	**-25** *-10*	**45** *18*
180	*7.0866*	**250**	*9.8425*	**0** *0*	**-30** *-12*	**50** *20*
250	*9.8425*	**315**	*12.4016*	**0** *0*	**-35** *-14*	**60** *24*

The low deviation of outside diameter ΔD_{mp} does not apply within the distance of 1/4 the width of the outer ring from the side

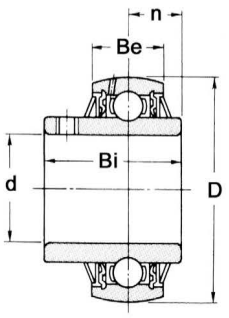

Distance Between Radial Plane Passing Through Center of Sphere of Outer Ring and Side of Inner Ring

Nominal bore diameter d				n Deviations Δn_s	
over		incl.			
mm	inch	mm	inch	high	low
-	-	50	1.9685	±200	± 79
50	1.9685	80	3.1496	±250	± 98
80	3.1496	120	4.7244	±300	±118
120	4.7244	-	-	±350	±138

TOLERANCES OF HOUSINGS

Spherical Bore Diameter of Housings

Unit : μm/0.0001 inch

Nominal bore diameter D_a				Tolerance class H7				Tolerance class J7			
over		incl.		ΔD_{amp} Deviations		ΔD_{as} Deviations		ΔD_{amp} Deviations		ΔD_{as} Deviations	
mm	inch	mm	inch	high	low	high	low	high	low	high	low
30	1.1811	50	1.9685	+25 +10	0 0	+30 +12	-5 -2	+14 +6	-11 -4	+19 +7	-16 -6
50	1.9685	80	3.1496	+30 +12	0 0	+36 +14	-6 -2	+18 +7	-12 -5	+24 +9	-18 -7
80	3.1496	120	4.7244	+35 +14	0 0	+42 +17	-7 -3	+22 +9	-13 -5	+29 +11	-20 -8
120	4.7244	180	7.0866	+40 +16	0 0	+48 +19	-8 -3	+26 +10	-14 -6	+34 +13	-22 -9
180	7.0866	250	9.8425	+46 +18	0 0	+55 +22	-9 -4	+30 +12	-16 -6	+39 +15	-25 -10
250	9.8425	315	12.4016	+52 +20	0 0	+62 +24	-10 -4	+36 +14	-16 -6	+46 +18	-26 -10

1) Symbols

ΔD_{amp}: Mean spherical bore diameter deviation

ΔD_{as}: Spherical bore diameter deviation

2) Dimensional tolerances for spherical bore diameter of housing are classified as H7 for clearance fit, and J7 for internediate fit.

Pillow Block Housings (PE, PA, TB, AK)

Housing numbers				H Deviations ΔH_s
				Unit : μm/0.0001 inch
PE203	-	-	-	
PE204	PA204	TB204	AK204	
PE205	PA205	TB205	AK205	
PE206	PA206	TB206	AK206	±150 ± 59
PE207	PA207	TB207	AK207	
PE208	PA208	TB208	AK208	
PE209	PA209	TB209	AK209	
PE210	PA210	TB210	AK210	
PE211	-	-	-	
PE212	-	-	-	±200 ± 79
PE213	-	-	-	
PE214	-	-	-	
PE215	-	-	-	

1) H is height of the shaft center line

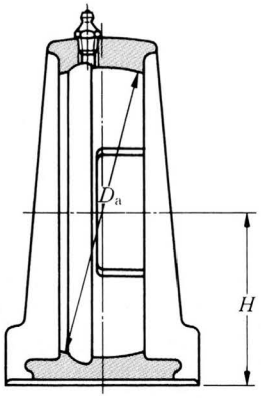

TOLERANCES OF HOUSINGS

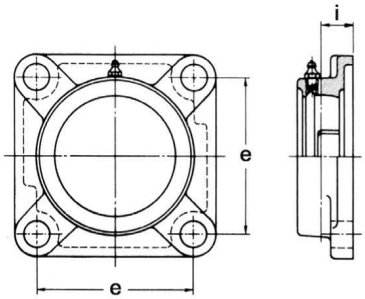

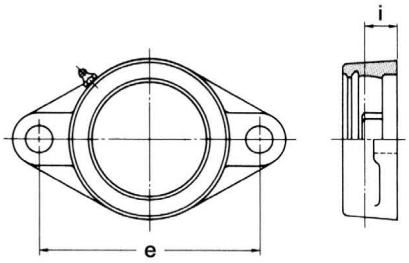

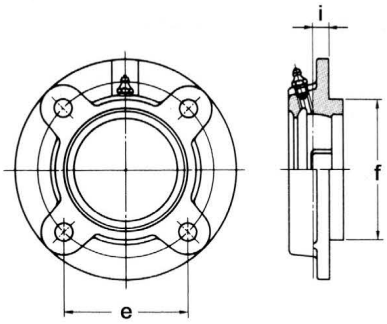

Flange unit housings (F, FS, FC, FCS, FL, FT, FD, LF)

Unit : µm/0.0001 inch

Housing numbers						e Deviations Δes	i Deviations Δis	f Deviations Δfs FC-FCS high	f Deviations Δfs FC-FCS low	Radial runout of spigot joint Δis (max)
F203	-	-	FL203	FD203	LF203					
F204	FC204	FCS204	FL204	FD204	LF204					
F205	FC205	FCS205	FL205	FD205	LF205			**0** *0*	**-46** *-18*	
F206	FC206	FCS206	FL206	FD206	LF206	**±700** *±276*	**±500** *±197*			**200** *79*
F207	FC207	FCS207	FL207	FD207	LF207					
F208	FC208	FCS208	FL208	-	-			**0** *0*	**-54** *-21*	
F209	FC209	FCS209	FL209	-	-					
F210	FC210	FCS210	FL210	-	-					
F211	FC211	FCS211	FL211	-	-					
F212	FC212	FCS212	FL212	-	-					
F213	FC213	FCS213	FL213	-	-	**±1000** *± 394*	**±800** *±315*	**0** *0*	**-63** *-25*	**300** *118*
F214	FC214	FCS214	FL214	-	-					
F215	FC215	FCS215	FL215	-	-					

F = FS

FL = FT

1) **e** is the bolt hole's center line dimension. **i** is distance between the center line of spherical bore diameter of the housing and mounting surfaces, and **f** is outside diameter of the spigot joint.

2) Radial runout of spigot joint is applied for flange units with spigot joints.

3) For FS and FT types, tolerances for F shall be applied.

TOLERANCES OF HOUSINGS

Flange Unit Housings (FB, FK, FA)

Housing numbers	i Deviations Δ is	Housing Numbers	e Deviations Δes
-	±500 ±197	PF203	±500 ±197
FB, FK, FA204		PF204	
FB, FK, FA205		PF205	
FB, FK, FA206		PF206	
FB, FK, FA207		PF207	
FB, FK, FA208		PF208	
FB, FK, FA209		PFL203	
		PFL204	
FB, FK, FA210		PFL205	
FA211	±800 ±315	PFL206	
		PFL207	

Unit: μm/0.0001 inch

1) i is distance between the center line of spherical bore diameter of housings.
2) e is the bolt hole's center line dimension

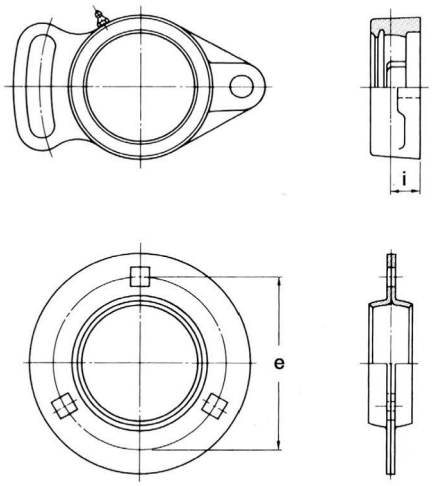

Take-Up Unit Housings (T)

Unit: μm/0.0001 inch

Housing numbers		k Deviations Δks		e Deviations Δes		Parallelism of guide (max.)
		high	low	high	low	
T204	ST204	0 0	+200 + 79	0 0	-500 -197	500 197
T205	ST205					
T206	ST206					
T207	ST207					
T208	ST208					
T209	ST209					
T210	ST210					
T211	ST211	0 0	±300 ±118	0 0	-800 -315	600 236
T212	ST212					
T213	ST213					
T214	ST214					
T215	ST215					
-	-					
-	-					
-	-					

1) k is the width of guide rail grooves
2) e is the maximum span of guide rail grooves

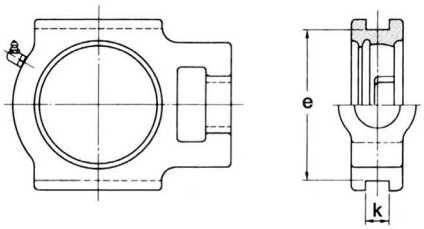

Cartridge Unit Housings (C)

Unit: μm/0.0001 inch

Housing numbers	a Deviations Δas C2		Radial runout of outside surface (max.)	l Deviations Δls
	high	low		
C204	0 0	-30 -12	200 79	±200 ± 79
C205				
C206				
C207	0 0	-35 -14		
C208				
C209				
C210				
C211				
C212				
C213	0 0	-40 -16	300 118	±300 ±118

1) a is the outside diameter of cartridge housings
2) l is width of cartridge housings

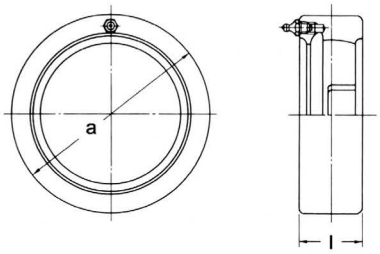

INTERCHANGE

SERIES	MANUFACTURER	*KML*
100	(BCA, GPZ)	6000
100	(Hoffmann, Pollard)	6200
200	(BCA, GPZ, Hoover, McGill)	6200
00-TA-12	(BCA)	51200
0200	(Hoover)	7200
0LOO	(NDH)	7000
1000DECG	(RHP)	HC
1000G	(RHP)	UC
1000KG	(RHP)	UK
100ACD	(Hoffmann)	7200
100C	(Pollard)	6200N
100C(W/C)	(Pollard)	6200NR
100-D	(BCA)	6000RS
100-DD	(BCA)	6000-2RS
100GW	(Pollard)	7200
100GWX6	(Pollard)	7200B
100K	(Hoffmann)	6200N
100KR	(Hoffmann)	6200NR
100-KS	(MRC)	6000
100-KSF	(MRC)	6000Z
100-KSFF	(MRC)	6000-ZZ
100-KSG	(MRC)	6000NR
100-KSZ	(MRC)	6000RS
100-KSZZ	(MRC)	6000-2RS
100-L	(BCA)	6000NR
100MS	(Fafnir)	PF211
100P	(Hoffmann)	6200Z
100P	(Pollard)	6200RS
100PP	(Hoffmann)	6200-ZZ
100PP	(Pollard)	6200-2RS
100RS	(Hoffmann)	6200RS
100RSS	(Hoffmann)	6200-2RS
100-S	(BCA)	6000Z
100-SS	(BCA)	6000-ZZ
100Z	(Pollard)	6200Z
100ZZ	(Pollard)	6200-ZZ
10LOO	(RIV)	6000-2RS
1100	(RHP)	UC
1100CG	(RHP)	SER
1100-F	(MRC)	51200
111500	(GPZ)	2200K
1200	(FAG, GPZ, Koyo, Nachi, NSK, NTN, SKF, SNR, SRO, Steyr)	1200
1200	(Federal)	6200
1200	(RHP)	1200
1200CG	(Federal)	6200NR
1200EC	(RHP)	SA
1200ECG	(RHP)	SA200G
1200F	(Federal)	6200Z
1200FF	(Federal)	6200-ZZ
1200G	(RHP)	SB200G
1200K	(RHP)	1200K
1200L	(Federal)	6200RS
1200LL	(Federal)	6200-2RS
1200SA	(Federal)	1200
12200	(GPZ)	NF200
12300	(GPZ)	NF300
1300	(FAG, GPZ, Koyo, Nachi, NSK, NTN, SKF, SNR, SRO, Steyr)	1300
1300	(Federal)	6300
1300	(Federal)	6300NR
1300	(RHP)	1300
1300CG	(Federal)	6300Z
1300EC	(RHP)	CSA
1300F	(Federal)	6300-ZZ
1300FF	(Federal)	6300RS
1300L	(Federal)	6300-2RS
1300LL	(Federal)	6300-2RS
1300R	(Federal)	6300RS
1300RR	(Federal)	6300-2RS
1300SA	(Federal)	1300
1400	(GPZ)	6400
1500	(GPZ)	2200
1600	(GPZ)	2300

SERIES	MANUFACTURER	*KML*
16000	(FAG, GMN, NSK, NTN, SKF, SNR, Steyr)	16000
16000	(RHP)	16000
1716200D-2LS	(SKF)	CSA
1726200-2RS	(RHP)	CS200DDU
1726200-2RS1	(SKF)	CS200DDU
1726300-2RS	(RHP)	CS300DDU
1726300-2RS1	(SKF)	CS300DDU
173200	(SKF)	SA200G
173600	(SKF)	SA
174600	(SKF)	CSA
180200	(GPZ)	6200-2RS
180300	(GPZ)	6300-2RS
1AC08-1-3/16	(NTN)	W208PPB7
1AH06-1	(NTN)	206KRR6
1AS08-1	(NTN)	W208PPB6
1AS08-1-1/8	(NTN)	W208PPB5
1AS08-1-5/32D1	(NTN)	GW208PPB5
1AS08-7/8	(NTN)	W208PPB13
2/DF240/8	(RHP)	W208PP6
2/DF240/9	(RHP)	W208PP5
2/DNF140\1-3/16	(RHP)	W208PPB7
2/DNF240/7	(RHP)	W208PPB13
2/DNF240/8	(RHP)	W208PPB6
2/DNF240/9	(RHP)	W208PPB5
200(N)P	(Fafnir)	6200RS
200(N)PP	(Fafnir)	6200-2RS
200-D	(BCA)	6200RS
200-DD	(BCA)	6200-2RS
200F	(McGill)	6200Z
200FF	(McGill)	6200-ZZ
200G	(Hoover, McGill)	6200NR
200K	(Fafnir)	6200
200KD	(Fafnir)	6200Z
200KDD	(Fafnir)	6200-ZZ
200KG	(Fafnir)	6200NR
200-L	(BCA)	6200NR
200NPPB	(Fafnir, INA)	CS200DDU
200-S	(BCA)	6200Z
200-S	(MRC)	6200
200-SF	(MRC)	6200Z
200-SFF	(MRC)	6200-ZZ
200-SG	(MRC)	6200NR
200-SS	(BCA)	6200-ZZ
200-SZ	(MRC)	6200RS
200-SZZ	(MRC)	6200-2RS
20200	(NDH)	7200
202FFH8	(BCA)	202NPP9
202NPP9	(Fafnir, PEER)	202NPP9
202RRE	(BCA, PEER)	202RRE
20300	(NDH)	7300
203JD	(PEER)	203JD
203K	(Fafnir)	203JD
203KRR2	(Fafnir, PEER)	203KRR2
203KRR5	(Fafnir, PEER)	203KRR5
203RRAR10	(BCA)	203KRR2
204BBAR	(BCA)	Z9504RST
204FGB	(BCA)	204KRD4
204-FREN	(BCA)	204-FREN
204FVMN	(BCA)	204RY2
204KRD4	(Fafnir, PEER)	204KRD4
204RY2	(Fafnir, PEER)	204RY2
205E-2RST	(PEER)	205E-2RST
205KR3	(Fafnir, PEER)	205KR3
205PPB7	(Fafnir, PEER)	205PPB7
205RHN	(BCA)	205KR3
205RVA	(BCA)	205E-2RST
205TTH	(BCA)	205PPB7
206KRR6	(Fafnir, PEER)	206KRR6
206KRRB6	(Fafnir, PEER)	206KRRB6
2100	(GPZ)	N1000
21300	(FAG, NTN, SKF)	21300
21300	(RHP)	21300
21300E	(Nachi)	21300

INTERCHANGE

SERIES	MANUFACTURER	KML
21300R	(Koyo)	21300
21300V	(SNR)	21300
2200	(FAG, Koyo, Nachi, NSK, NTN, Rollway, SKF, SNR, SRO, Steyr)	2200
2200	(GPZ)	N200
2200	(RHP)	2200
2200K	(RHP)	2200K
2200SA	(Federal)	2200
22200	(FAG)	22200W33
22200	(RHP)	22200
22200B	(NTN)	22200
22200C	(SKF)	22200W33
22200CW33	(SKF)	22200W33
22200E	(Nachi)	22200
22200HL	(FAG)	22200
22200LB	(Link Belt)	22200W33
22200R	(Koyo)	22200
22200S	(FAG)	22200W33
22200V	(SNR)	22200
22200W33	(RHP)	22200W33
22300	(FAG)	22300W33
22300	(SRO)	22300
22300	(RHP)	22300
22300B	(NTN)	22300
22300C	(SKF)	22300W33
22300CC	(SKF)	---
22300CCW33	(SKF)	----
22300CW33	(SKF)	22200W33
22300E	(FAG)	----
22300E	(Nachi)	22300
22300ES	(FAG)	---
22300HL	(FAG)	22300
22300LB	(Link Belt)	22300W33
22300R	(Koyo)	22300
22300S	(FAG)	22300W33
22300V	(SNR)	22300
22300W33	(RHP)	22300W33
2300	(FAG, Koyo, Nachi, NSK, NTN, Rollway, SKF, SNR, SRO, Steyr)	2300
2300	(GPZ)	N300
2300	(RHP)	2300
23000	(RHP)	23000
23000B	(NTN)	23000
23000C	(SKF)	23000
23000E	(Nachi)	23000
23000HL	(FAG)	23000
23000LB	(Link Belt)	23000W33
23000R	(Koyo)	23000
23000V	(SNR)	23000
23000W33	(RHP)	23000W33
2300SA	(Federal)	2300
23100	(RHP)	23100
23100B	(NTN)	23100
23100C	(SKF)	23100
23100E	(Nachi)	23100
23100HL	(FAG)	23100
23100LB	(Link Belt)	23100W33
23100R	(Koyo)	23100
23100V	(SNR)	23100
23100W33	(RHP)	23100W33
23200	(RHP)	23200
23200B	(NTN)	23200
23200C	(SKF)	23200
23200E	(Nachi)	23200
23200HL	(FAG)	23200
23200LB	(Link Belt)	23200W33
23200V	(SNR)	23200
23200W33	(RHP)	23200W33
238200(D)-2LS	(SKF)	SA
2600	(NDH)	1300
28/PDNF145\1-1/2	(RHP)	W209PPB4
2AH06-1	(NTN)	206KRRB6

SERIES	MANUFACTURER	KML
2AS08-1-1/8D1	(NTN)	W208PPB8
2AS08-1D1	(NTN)	W208PPB9
2AS09-1-1/4D1	(NTN)	W209PPB5
2AS10-1-1/8D1	(NTN)	W210PPB6
2FE	(NDH)	SAFL
2FS	(NDH)	UCFL
300	(BCA, GPZ, Hoffmann, Hoover, McGill, Pollard)	6300
3003100	(GPZ)	23000
3003700	(GPZ)	23100
300ACD	(Hoffmann)	7300
300C	(Pollard)	6300N
300C(W/C)	(Pollard)	6300NR
300-D	(BCA)	6300RS
300-DD	(BCA)	6300-2RS
300F	(McGill)	6300Z
300FF	(McGill)	6300
300G	(Hoover, McGill)	6300NR
300K	(Fafnir)	6300
300K	(Hoffmann)	6300N
300KD	(Fafnir)	6300Z
300KDD	(Fafnir)	6300-ZZ
300KG	(Fafnir)	6300NR
300KR	(Hoffmann)	6300NR
300-L	(BCA)	6300NR
300NP	(Fafnir)	6300RS
300NPP	(Fafnir)	6300-2RS
300P	(Hoffmann)	6300Z
300P	(Pollard)	6300RS
300PP	(Hoffmann)	6300-ZZ
300PP	(Pollard)	6300-2RS
300RS	(Hoffmann)	6300RS
300RSS	(Hoffmann)	6300-2RS
300-S	(BCA)	6300Z
300-S	(MRC)	6300
300-SF	(MRC)	6300Z
300-SFF	(MRC)	6300-ZZ
300-SG	(MRC)	6300NR
300-SS	(BCA)	6300-ZZ
300-SZ	(MRC)	6300RS
300-SZZ	(MRC)	6300-2RS
300Z	(Pollard)	6300Z
300ZZ	(Pollard)	6300-ZZ
30200	(NDH)	7200B
30300	(NDH)	7300B
3200	(FAG, Koyo, Nachi, NSK, NTN, SKF, SRO, Streyr)	5200
3200	(NDH)	6200
3200	(RHP)	5200
3200B	(SNR)	5200
32200	(GPZ)	NU200
32300	(GPZ)	NU300
32500	(GPZ)	NU2200
32600	(GPZ)	NU2300
3300	(FAG, Koyo, Nachi, NSK, NTN, SKF, SRO, Streyr)	5300
3300	(NDH)	6300
3300	(RHP)	5300
3300B	(SNR)	5300
3400	(NDH)	6400
3500	(GPZ)	22200
36/DF140\1-1/2	(RHP)	W208PP10
36/PDNF140\1-1/2	(RHP)	W208PPB2
3600	(GPZ)	22300
36200	(FAG)	HC
3AC09-1-1/2D1	(NTN)	GW209PPB4
3AC09D1	(NTN)	GW209PPB2
3AC10-1-15/16D1	(NTN)	W210PPB2
3AC10-1-3/4D1	(NTN)	W210PPB5
3AC11-2-3/16D1	(NTN)	W211PPB2
3AC14D1	(NTN)	GW214PPB2
3AS11-1-1/2D1	(NTN)	W211PPB3
3LOO	(Hoover, NDH)	6000
3LOO-G	(Hoover)	6000NR

INTERCHANGE

SERIES	MANUFACTURER	KML
400	(GPZ, Hoover, McGill)	6400
400K	(Fafnir)	6400
400-S	(MRC)	6400
40MS	(Fafnir)	PF203
40MST	(Fafnir)	PFL203
413200(D)	(SKF)	UC
42200	(GPZ)	NJ200
42300	(GPZ)	NJ300
43200	(NDH)	6200NR
43300	(NDH)	6300NR
43LOO	(NDH)	6000NR
46200	(GPZ)	7200B
46300	(GPZ)	7300B
477200	(SKF)	HC
479200	(SKF)	UC
47MS	(Fafnir)	PF204
47MST	(Fafnir)	PFL204
47MSTR	(Fafnir)	PFT204
491A	(Fafnir)	ST491A
4AS08-1-1/8	(NTN)	W208PPB12
4AS08-7/8	(NTN)	W208PPB11
4AS09-1-1/4	(NTN)	W209PPB7
4AS11-1-1/2	(NTN)	W211PPB6
4FE	(NDH)	SAF
4FS	(NDH)	UCF
5/PDNF150\1-3/4	(RHP)	W210PPB5
500	(Hoffmann, Pollard)	6400
50200	(GPZ)	6200N
50300	(GPZ)	6300N
51100	(FAG, Koyo, Nachi, NSK, NTN, Rollway, SKF, SNR,SRO, Steyr)	51100
51100	(RHP)	51100
51200	(FAG, Koyo, Nachi, NSK, NTN, Rollway, SKF, SNR, SRO, Steyr)	51200
51200	(RHP)	51200
5200(C)	(Sealmaster)	UC
52MS	(Fafnir)	PF205
52MST	(Fafnir)	PFL205
52MSTR	(Fafnir)	PFT205
5300(C)	(Sealmaster)	UC
56200	(FAG)	UC
5AS08-1-1/8	(NTN)	W208PP5
6000	(FAG, GMN, Hoffmann, Koyo, Nachi, NSK, NTN, Rollway, SKF, SNR, Steyr)	6000
6000	(GPZ)	E
6000	(RHP)	6000
6000-2RS	(FAG, GMN, Rollway, SKF)	6000-2RS
6000-2RS	(RHP)	6000-2RS
6000-2Z	(FAG, GMN, Rollway, SKF,	6000-ZZ
6000-2Z	(RHP)	6000-ZZ
6000E	(SNR)	6000RS
6000EE	(SNR)	6000-2RS
6000K	(Hoffmann)	6000N
6000KR	(Hoffmann)	6000NR
6000LL	(NTN)	6000-2RS
6000N	(FAG, GMN, NTN, Rollway, SKF)	6000N
6000N	(RHP)	6000N
6000NR	(FAG, GMN, Koyo, Nachi, NSK, NTN, Rollway, SKF, SNR)	6000NR
6000NR	(RHP)	6000NR
6000P	(Hoffmann)	6000Z
6000PP	(Hoffmann)	6000-ZZ
6000RS	(FAG, GMN, Hoffmann, Rollway, SKF)	6000RS
6000RS	(RHP)	6000RS
6000RSS	(Hoffmann)	6000-2RS
6000X	(SRO)	6000
6000XZ	(SRO)	6000Z
6000XZZ	(SRO)	6000-ZZ

SERIES	MANUFACTURER	KML
6000Z	(FAG, GMN, Nachi, NTN, Roolway, SKF, SNR, Steyr)	6000Z
6000Z	(RHP)	6000Z
6000ZZ	(Nachi, NTN, SNR)	6000-ZZ
60100	(GPZ)	6000Z
60200	(GPZ)	6200Z
60300	(GPZ)	6300Z
61800	(SKF, INA)	6800
61900	(SKF, INA)	6900
6200	(FAG, NSK, NTN, Rollway, SKF, SNR, SRO, Steyr)	6200
6200	(RHP)	6200
6200-2GB	(Steyr)	6200-2RS
6200-2NS	(Nachi)	6200-2RS
6200-2RS	(FAG, GMN, Koyo, Rollway, SKF, SRO)	6200-2RS
6200-2RS	(RHP)	6200-2RS
6200-2Z	(FAG, GMN, Rollway, SKF, Steyr)	6200-ZZ
6200-2Z	(RHP)	6200-ZZ
6200DD	(NSK)	6200-2RS
6200E	(SNR)	6200RS
6200EE	(SNR)	6200-2RS
6200EES	(Steyr)	CS200DDU
6200GB	(Steyr)	6200RS
6200LL	(NTN)	6200-2RS
6200N	(FAG, GMN, NTN, Rollway, SKF)	6200N
6200N	(RHP)	6200N
6200NR	(FAG, GMN, Koyo, Nachi, NSK, NTN, Rollway, SKF, SNR, SRO, Steyr)	6200NR
6200NR	(RHP)	6200NR
6200NS	(Nachi)	6200RS
6200RS	(FAG, GMN, Koyo, Rollway, SKF, SRO)	6200RS
6200RS	(RHP)	6200RS
6200Z	(FAG, GMN, Koyo, Nachi, NSK, NTN, Rollway, SKF, SNR, SRO, Steyr)	6200Z
6200Z	(RHP)	6200Z
6200ZN	(RHP)	6200ZN
6200ZNR	(RHP)	6200ZNR
6200ZZ	(Koyo, Nachi, NSK, NTN, SNR, SRO)	6200-ZZ
62MS	(Fafnir)	PF206
62MST	(Fafnir)	PFL206
62MSTR	(Fafnir)	PFT206
6300	(FAG, GMN, Koyo, Nachi, NSK, NTN, Rollway, SKF, SNR, SRO, Steyr)	6300
6300	(RHP)	6300
6300	(RHP)	6300
6300-2GB	(Steyr)	6300-2RS
6300-2NS	(Nachi)	6300-2RS
6300-2RS	(FAG, GMN, Koyo, Rollway, SKF)	6300-2RS
6300-2RS	(RHP)	6300-2RS
6300-2Z	(FAG, GMN, Rollway, SKF, Steyr)	6300-ZZ
6300-2Z	(RHP)	6300-ZZ
6300DD	(NSK)	6300-2RS
6300E	(SNR)	6300RS
6300EE	(SNR)	6300-2RS
6300GB	(Steyr)	6300RS
6300LL	(NTN)	6300-2RS
6300N	(FAG, GMN, NTN, Rollway, SKF)	6300N
6300N	(RHP)	6300N
6300NR	(FAG, GMN, Koyo, Nachi, NSK, NTN, Rollway, SKF, SNR, SRO, Steyr)	6300NR
6300NR	(RHP)	6300NR
6300NS	(Nachi)	6300RS

INTERCHANGE

SERIES	MANUFACTURER	KML
6300RS	(FAG, GMN, Koyo, Rollway, SKF)	6300RS
6300RS	(RHP)	6300RS
6300Z	FAG, GMN, Koyo, Nachi, NSK, NTN, Rollway, SKF, SNR, SRO, Steyr)	6300Z
6300Z	(RHP)	6300Z
6300ZN	(RHP)	6300ZN
6300ZNR	(RHP)	6300ZNR
6300ZZ	(Koyo, Nachi, NSK, NTN, SNR, SRO)	6300-ZZ
630300	(RIV)	UC
6400	(FAG, Koyo, Nachi, NSK, NTN, Rollway, SKF, SRO, Steyr)	6400
6400	(RHP)	6400
6AS08-1-1/8D1	(NTN)	W208PP8
7000	(SKF)	7000
7000	(RHP)	7000
7000100	(GPZ)	16000
7100-KR	(MRC)	7000
7200	(BCA, FAG, Federal, GMN, Koyo, MRC, Nachi, NSK, NTN, SKF, SNR, SRO, Steyr)	7200
7200	(Hoover)	6200Z
7200	(RHP)	7200
7200B	(FAG, Koyo, Nachi, NSK, NTN, Rollway, SKF, SNR)	7200B
7200B	(RHP)	7200B
7200BEP	(SKF)	7200BETN
7200BETN	(RHP)	7200BETN
7200P	(MRC)	7200B
7200W	(Fafnir)	7200
72MS	(Fafnir)	PF207
72MST	(Fafnir)	PFL207
72MSTR	(Fafnir)	PFT207
7300	(BCA, FAG, Federal, Koy, Nachi, NSK, NTN, SKF, SNR, SRO, Steyr)	7300
7300	(Hoover)	6300Z
7300	(RHP)	7300
7300B	(FAG, Koyo, Nachi, NSK, NTN, SKF, SNR)	7300B
7300B	(RHP)	7300B
7300BEP	(SKF)	7300BETN
7300BETN	(RHP)	7300BETN
7300W	(Fafnir)	7300
73LOO	(Hoover, NDH)	6000Z
7500	(NDH)	6200Z
7600	(NDH)	6300Z
76200	(FAG)	CS200DDU
77200	(Hoover)	6200-ZZ
77300	(Hoover)	6300-ZZ
773LOO	(Hoover, NDH)	6000-ZZ
77500	(NDH)	6200-ZZ
77600	(NDH)	6300-ZZ
7AC10-1-15/16D1	(NTN)	W210PP2
7AC11-2-3/16D1	(NTN)	W211PP2
7AS10-1-1/8D1	(NTN)	GW210PP4
7AS11-1-1/2D1	(NTN)	W211PP3
80100	(GPZ)	6000-ZZ
80200	(GPZ)	6200-ZZ
80MS	(Fafnir)	PF208
8100	(GPZ)	51100
8200	(GPZ)	51200
85MS	(Fafnir)	PF209
90MS	(Fafnir)	PF210
9100	(Federal)	6000
9100(N)P	(Fafnir)	6000RS
9100(N)PP	(Fafnir)	6000-2RS
9100CG	(Federal)	6000NR
9100F	(Federal)	6000Z
9100FF	(Federal)	6000-ZZ
9100K	(Fafnir)	6000
9100KD	(Fafnir)	6000Z

SERIES	MANUFACTURER	KML
9100KDD	(Fafnir)	6000-ZZ
9100KG	(Fafnir)	6000NR
9200	(Hoover)	6000RS
92200	(GPZ)	NUP200
92300	(GPZ)	NUP300
9300	(Hoover)	6300RS
93LOO	(Hoover)	6000RS
99200	(Hoover)	6200-2RS
99300	(Hoover)	6300-2RS
993LOO	(Hoover)	6000-2RS
A	(Hoffmann)	E
A	(RIV)	6200
A1200WB	(NDH)	NU200
A1300WB	(NDH)	NU300
AAJ	(RIV)	2200
AAJK	(RIV)	2200K
AANOn	(RIV)	5200
AARS	(RIV)	22200
AD	(RIV)	6200N
ADY	(RIV)	6200NR
AEL200	(NTN)	SA200G
AELF200	(NTN)	SAF
AELFC200	(NTN)	SAFC
AELFD200	(NTN)	SAFD
AELFL200	(NTN)	SAFL
AELP200	(NTN)	SAPE
AELPF200	(NTN)	SAPF
AELPFL200	(NTN)	SAPFL
AELPL200	(NTN)	SAAK
AELPP200	(NTN)	SAPP
AELRPP200	(NTN)	SARPP
AELS200	(NTN)	CSA
AELT200	(NTN)	SAT
AELUP200	(NTN)	SAPA
AJ	(RIV)	1200
AJK	(RIV)	1200K
ALF200	(FYH)	SALF
ALN	(RIV)	6200-2RS
ALP200	(FYH)	SAPE
ANRS	(RIV)	23200
AOn	(RIV)	7200
APL	(RIV)	6200Z
APLD	(RIV)	6200ZN
APLY	(RIV)	6200ZNR
APPL	(RIV)	6200-ZZ
AS200	(NTN)	SB200G
AS4508AD	(NDH)	W208PP8
AS4508BD	(NDH)	W208PP9
AS4508BE	(NDH)	W208PPB9
AS4508BH	(NDH)	W208PP5
AS4508BJ	(NDH)	W208PPB5
AS4508BK	(NDH)	W208PPB6
AS4508EF	(NDH)	W208PPB8
AS4508FF	(NDH)	W208PPB13
AS4509A	(NDH)	W209PPB5
AS4509BD	(NDH)	W209PPB4
AS4509BE	(NDH)	W209PPB2
AS4509EF	(NDH)	W209PPB8
AS4510B	(NDH)	W210PP4
AS4510D	(NDH)	W210PPB5
AS4510F	(NDH)	W210PPB4
AS4511BD	(NDH)	W211PP3
AS4511BE	(NDH)	W211PPB3
AS4511C	(NDH)	W211PP2
ASF200	(NTN)	SBF
ASFC200	(NTN)	SBFC
ASFD200	(NTN)	SBFD
ASFL200	(NTN)	SBFL
ASP200	(NTN)	SBPE
ASPF200	(NTN)	SBPF
ASPFL200	(NTN)	SBPFL
ASPL200	(NTN)	SBAK
ASPP200	(NTN)	SBPP
ASRPP200	(NTN)	SBRPP

INTERCHANGE

SERIES	MANUFACTURER	*KML*
ASS200	(NTN)	CSB
AST200	(NTN)	SBT
ASUP200	(NTN)	SBPA
AY-NPPB	(INA)	SB
B	(Asahi)	SB200G
B	(RIV)	6300
B100	(Browning)	SB
B200	(Browning)	SA
B220	(Browning)	HC
B250	(Browning)	UC
B350	(Browning)	UCX
B-B	(Nachi)	SB200G
BBJ	(RIV)	2300
BBNOn	(RIV)	5300
BBRS	(RIV)	22300
BD	(RIV)	6300N
BDY	(RIV)	6300NR
BJ	(RIV)	1300
BLF200	(FYH)	SBLF
BLN	(RIV)	6300-2RS
BLP200	(FYH)	SBPE
BOn	(RIV)	7300
BPF	(Asahi)	SBPF
BPF-B	(Nachi)	SBPF
BPFL	(Asahi)	SBPFL
BPL	(RIV)	6300Z
BPLD	(RIV)	6300ZN
BPLY	(RIV)	6300ZNR
BPP	(Asahi)	SBPP
BPP-B	(Nachi)	SBPP
BPPL	(RIV)	6300-ZZ
BRS	(RIV)	21300
BU1200L	(NDH)	NF200
BU1200Z	(NDH)	N200
BU1300L	(NDH)	NF300
BU1300Z	(NDH)	N300
C	(RIV)	6400
C25	(McGill)	UCPE
C35	(McGill)	UCPX
CB200	(Koyo)	CS200DDU
CL25	(McGill)	UCAK
CNP	(RHP)	UCTB
CR	(Fafnir, INA)	CR
CS-DDU	(NSK)	CS200DDU
CS-LLU	(NTN)	CS200DDU
CTL1000	(Timken)	K1000
CTL1063	(Timken)	K1063
CTL3500	(Timken)	K3500
DAAVP	(RIV)	NU2200
DAPV	(RIV)	N200
DAQV	(RIV)	NF200
DAVP	(RIV)	NU200
DAVQ	(RIV)	NJ200
DBBVP	(RIV)	NU2300
DBPV	(RIV)	N300
DBQV	(RIV)	NF300
DBVP	(RIV)	NU300
DBVQ	(RIV)	NJ300
DC208TT10	(BCA)	W208PP10
DC208TT5	(BCA)	W208PP5
DC208TT6	(BCA)	W208PP6
DC208TT8	(BCA)	W208PP8
DC210TT2	(BCA)	W210PP2
DC210TT4	(BCA)	W210PP4
DC210TTR4	(BCA)	GW210PP4
DC211TT2	(BCA)	W211PP2
DC211TT3	(BCA)	W211PP3
DC211TTR2	(BCA)	GW211PP2
DC211TTR3	(BCA)	GW211PP3
DHU1-1/2R-209	(Fafnir)	ST491B
DN100	(FBC)	6000-2RS
DN200	(FBC)	6200-2RS
DN2000	(FBC)	RLS-2RS
DN300	(FBC)	6300-2RS

SERIES	MANUFACTURER	*KML*
DN3000	(FBC)	RMS-2RS
DNF245/10	(RHP)	W209PPB8
DS208TT13	(BCA)	W208PPB13
DS208TT2A	(BCA)	W208PPB2
DS208TT4	(BCA)	W208PPB4
DS208TT5	(BCA)	W208PPB5
DS208TT6	(BCA)	W208PPB6
DS208TT7	(BCA)	W208PPB7
DS208TT8	(BCA)	W208PPB8
DS208TT9	(BCA)	W208PPB9
DS208TTR5	(BCA)	GW208PPB5
DS208TTR6	(BCA)	GW208PPB6
DS208TTR8	(BCA)	GW208PPB8
DS209TT2	(BCA)	W209PPB2
DS209TT4	(BCA)	W209PPB4
DS209TT5	(BCA)	W209PPB5
DS209TTR10	(BCA)	GW209PPB11
DS209TTR2	(BCA)	GW209PPB2
DS209TTR4	(BCA)	GW209PPB4
DS209TTR5	(BCA)	GW209PPB5
DS209TTR8	(BCA)	GW209PPB8
DS210TT2	(BCA)	W210PPB2
DS210TT4	(BCA)	W210PPB4
DS210TT5	(BCA)	W210PPB5
DS210TT6	(BCA)	W210PPB6
DS210TTR2	(BCA)	GW210PPB2
DS210TTR4	(BCA)	GW210PPB4
DS211TT2	(BCA)	W211PPB2
DS211TT3	(BCA)	W211PPB3
DS211TTR2	(BCA)	GW211PPB2
DS211TTR3	(BCA)	GW211PPB3
E	(FAG, Koyo, Nachi, NSK, SKF, SRO, Steyr)	E
E	(RHP)	E
EE	(FAG, Koyo, Nachi, NTN, SKF)	R
EL	(RIV)	16000
ELL	(RIV)	6000
ELN	(RIV)	16000
ELP	(RIV)	51100
EN200	(NSK)	SA
ENFL200	(NSK)	SAFL
ENP200	(NSK)	SAPE
ENPF200	(NSK)	SAPF
ENPP200	(NSK)	SAPP
ENPPR200	(NSK)	SARPP
ENR200	(NSK)	CSA
ER	(McGill, Sealmaster, INA)	SER
ER200	(FYH)	SER
ERS	(RIV)	23000
EW200	(NSK)	HC
EWF200	(NSK)	HCF
EWFC200	(NSK)	HCFC
EWFH200	(NSK)	HCFS
EWFL200	(NSK)	HCFL
EWFLH200	(NSK)	HCFT
EWLP200	(NSK)	HCAK
EWP200	(NSK)	HCPE
EWPA200	(NSK)	HCPA
EWT200	(NSK)	HCT
F3Y200N	(Link Belt)	HCFS
FB	(Federal)	E
FB16200	(FAG)	SAPF
FB220	(Browning)	HCFS
FB230	(Browning)	HCFT
FB250	(Browning)	UCF
FB260	(Browning)	UCFL
FB350	(Browning)	UCFX
FB56200	(FAG)	UCPF
FC	(RHP)	UCFC
FC2-25	(McGill)	UCFL
FC2-35	(McGill)	UCFLX
FC4-25	(McGill)	UCF
FC4-35	(McGill)	UCFX
FC-A	(RHP)	SBFC

INTERCHANGE

SERIES	MANUFACTURER	*KML*
FC-DEC	(RHP)	HCFC
FC-EC	(RHP)	SAFC
FD209RA	(BCA)	ST491A
FD209RB	(BCA)	ST491B
F-FM	(SKF)	SAPF
FG16200	(FAG)	SAF
FG200ER(U)	(Asahi, Nachi)	HC
FG56200	(FAG)	UCF
FGAK200	(Asahi, Nachi)	HCAK
FH200ER(U)	(Asahi, Nachi)	SA
FHPR200	(Nachi)	SARPP
FHR200	(PEER)	CSA
FHR200ER(U)	(Asahi)	CSA
FHS200	(PEER)	SB
FHS200G	(PEER)	SB200G
FHSR200	(PEER)	CSB
FLCT	(Fafnir)	SAFD
FLCTE	(INA)	SAFD
FLCTEY	(INA)	SBFD
FNR-R	(BCA)	SAF
FT-FM	(SKF)	SAPFL
FTYB-S(D)	(SKF)	UCFL
FX3Y200N	(Link Belt)	HCFT
FY-CB	(SKF)	SAF
FY-FM	(SKF)	SAF
FYGF-FJ	(SKF)	SAFC
FYGF-SD	(SKF)	UCFC
FYGF-W	(SKF)	HCFC
FY-S	(SKF)	UCF
FYTB-CB	(SKF)	SAFL
FYTB-FJ	(SKF)	SAFL
FYTB-FM	(SKF)	SAFL
FYTB-L(D)	(SKF)	UCFL
FYTB-TF	(SKF)	UCFL
FYTB-TM	(SKF)	UCFL
FYTB-WM	(SKF)	HCFT
FY-TF	(SKF)	UCF
FYTF-FJ	(SKF)	SAFD
FY-TM	(SKF)	UCF
FY-WM	(SKF)	HCFS
FY-X	(SKF)	HCFS
G100MSA	(Fafnir)	PF211G
G52MSA	(Fafnir)	PF205G
G62MSA	(Fafnir)	PF206G
G72MSA	(Fafnir)	PF207G
G80MSA	(Fafnir)	PF208G
G85MSA	(Fafnir)	PF209G
G90MSA	(Fafnir)	PF210G
GA1100-2RSB	(Koyo)	HC
GAP1100B	(Koyo)	SAPE
GAPL1100B	(Koyo)	HCAK
GARA100-2RSA	(Koyo)	SA200G
GARAF100A	(Koyo)	SAF
GARAFL100A	(Koyo)	SAFL
GARAP100A	(Koyo)	SAPE
GARAPL100A	(Koyo)	SAAK
GAY-NPPB	(INA)	SB200G
GC-KRRB	(Fafnir)	UC
GC-KRRG2	(Fafnir)	SER
GE	(SKF, INA, Nachi)	GE
GE-KRRB	(Fafnir, INA)	HC
GEM200	(NSK)	SA200G
GEMTR200J	(NSK)	SAST or SAT
GEZ	(SKF, INA)	GEZ
GFF1100B	(Koyo)	HCFS
GFFL1100B	(Koyo)	HCFT
G-KRRB	(Fafnir, INA)	HC
GLCTE	(INA)	SAFD
GLCTEY	(INA)	SBFD
GRA	(Fafnir)	SAPF200G
GRAE-NPPB	(Fafnir, INA)	SA200G
GRA-NPPB	(INA)	SA200G
GRA-RRB	(Fafnir)	SA200G
GRFD	(Fafnir)	HCRFT

SERIES	MANUFACTURER	*KML*
GRR	(Fafnir)	HCPF200G
GVFD	(Fafnir)	SARFT
GVFTD	(Fafnir)	SALF
GW208PPB5	(Fafnir)	GW208PPB5
GW208PPB6	(Fafnir)	GW208PPB6
GW208PPB8	(Fafnir)	GW208PPB8
GW209PPB11	(Fafnir)	GW209PPB11
GW209PPB2	(Fafnir)	GW209PPB2
GW209PPB4	(Fafnir)	GW209PPB4
GW209PPB5	(Fafnir)	GW209PPB5
GW209PPB8	(Fafnir)	GW209PPB8
GW210PP4	(Fafnir)	GW210PP4
GW210PPB2	(Fafnir)	GW210PPB2
GW210PPB4	(Fafnir)	GW210PPB4
GW211PP2	(Fafnir)	GW211PP2
GW211PP3	(Fafnir)	GW211PP3
GW211PPB2	(Fafnir)	GW211PPB2
GW211PPB3	(Fafnir)	GW211PPB3
GYA-RRB	(Fafnir)	SB200G
GYE-KRRB	(INA)	UC
GY-KRRB	(INA)	UC
HFC	(Koyo)	UCFCX
HJ	(R&M)	6400
HPC100GP	(BCA)	206KRR6
HPE	(NDH)	SAPE
HPS	(NDH)	UCPE
HPS100GP	(BCA)	206KRRB6
HV-(M)	(Koyo)	UCSTX or UCTX
J202KRR8	(Fafnir)	202RRE
JRN1200WB	(NDH)	NUP200
JRN1300WB	(NDH)	NUP300
KLNJ	(R&M)	R
KLNJ	(RHP)	R
KLNJ-2RS	(RHP)	R-2RS
KLNJ-2Z	(RHP)	R-ZZ
KLNJ-D	(R&M)	R-Z
KLNJ-DD	(R&M)	R-ZZ
KLNJ-RS	(RHP)	R-2RS
KLNJ-WSR	(R&M)	R-2RS
KLNJ-WSR	(R&M)	R-2RS
KLNJ-Z	(RHP)	R-Z
L200	(Fafnir)	1200
L300	(Fafnir)	1300
L6200	(Fafnir)	2200
L6300	(Fafnir)	2300
LC	(Koyo)	UCC
LCR	(Fafnir, INA)	LCR
LE-100	(Browning)	SA
LF	(Sealmaster)	SBRFT
LFT	(Sealmaster)	SBLF
LFTC-A	(RHP)	SBFD
LFTC-EC	(RHP)	SAFD
LJ	(R&M)	RLS
LJ	(RHP)	RLS
LJ-2RS	(RHP)	RLS-2RS
LJ-2Z	(RHP)	RLS-ZZ
LJ-D	(R&M)	6200Z or RLS-Z
LJ-DD	(R&M)	6200-ZZ or RLS-ZZ
LJ-G	(R&M)	6200N or RLS-N
LJ-GWC	(R&M)	6200NR or RLS-NR
LJ-N	(RHP)	RLS-N
LJ-NR	(RHP)	RLS-NR
LJ-RS	(RHP)	RLS-RS
LJT	(R&M)	7200
LJT-X6	(R&M)	7200B
LJ-WSR	(R&M)	6200-RS or RLS-RS
LJ-WSRR	(R&M)	6200-2RS or RLS-2RS
LJ-Z	(RHP)	RLS-Z
LLRJ	(R&M)	NU200
LLRJA	(R&M)	NJ200
LLRJB	(R&M)	NUP200
LP	(RIV)	51200
LPB	(RHP)	UCPP
LPB-A	(RHP)	SBPP

INTERCHANGE

SERIES	MANUFACTURER	*KML*
LPB-EC	(RHP)	SAPP
LPBR	(RHP)	UCRPP
LPBR-A	(RHP)	SBRPP
LPBR-EC	(RHP)	SARPP
LRCR	(Fafnir, PEER)	LRCR
LRCSM	(Fafnir, PEER)	LRCSM
LRJ	(R&M)	N200
LRJA	(R&M)	NF200
LRP	(Sealmaster)	SBRPP
LRS	(RIV)	23100
LS	(FAG, Federal, Hoffmann, Pollard)	RLS
LS-C	(Pollard)	RLS-N
LS-C(W/C)	(Pollard)	RLS-NR
LS-K	(Hoffmann)	RLS-N
LS-KR	(Hoffmann)	RLS-NR
LS-P	(Hoffmann)	RLS-Z
LS-P	(Pollard)	RLS-RS
LS-PP	(Hoffmann)	RLS-ZZ
LS-PP	(Pollard)	RLS-2RS
LS-RS	(Hoffmann)	RLS-RS
LS-RSS	(Hoffmann)	RLS-2RS
LS-Z	(Pollard)	RLS-Z
LS-ZZ	(Pollard)	RLS-ZZ
LV-(M)	(Koyo)	UCST or UCT
M	(R&M)	E
MA1200EL	(Bower)	NU200
MA1300EL	(Bower)	NU300
MCS200	(Rollway)	N200
MFC	(Sealmaster)	UCFCX
MFC	(RHP)	UCFCX
MJ	(R&M)	6300
MJ	(RHP)	RMS
MJ-2RS	(RHP)	RMS-2RS
MJ-2Z	(RHP)	RMS-ZZ
MJ-D	(R&M)	6300Z
MJ-DD	(R&M)	6300-ZZ
MJ-G	(R&M)	6300N
MJ-GWC	(R&M)	6300NR
MJ-N	(RHP)	RMS-N
MJ-NR	(RHP)	RMS-NR
MJ-RS	(RHP)	RMS-RS
MJT	(R&M)	7300
MJT-X6	(R&M)	7300B
MJ-WSR	(R&M)	6300-RS
MJ-WSRR	(R&M)	6300-2RS
MJ-Z	(RHP)	RMS-Z
ML200	(Rollway)	NF200
ML300	(Rollway)	NF300
MMRJ	(R&M)	NU300
MMRJA	(R&M)	NJ300
MMRJB	(R&M)	NUP300
MP	(Sealmaster)	UCPX
MP	(RHP)	UCPX
MR1200EL	(Bower)	NJ200
MR1300EL	(Bower)	NJ300
MR200C	(MRC)	N200
MR200D	(MRC)	NF200
MR200E	(MRC)	NU200
MR200G	(MRC)	NJ200
MR300C	(MRC)	N300
MR300D	(MRC)	NF300
MR300E	(MRC)	NU300
MR300G	(MRC)	NJ300
MRJ	(R&M)	N300
MRJA	(R&M)	NF300
MS	(FAG, Federal, Hoffman, Pollard)	RMS
MSC	(Sealmaster)	UCCX
MSC	(RHP)	UCCX
MS-C	(Pollard)	RMS-N
MS-C(W/C)	(Pollard)	RMS-NR
MSC300	(Rollway)	N300
MSF	(Sealmaster)	UCFX

SERIES	MANUFACTURER	*KML*
MSF	(RHP)	UCFX
MSF1000-K	(RHP)	UKF
MSFT	(Sealmaster)	UCFLX
MSFT	(RHP)	UCFLX
MSFT-1000-K	(RHP)	UKFL
MS-K	(Hoffmann)	RMS-N
MS-KR	(Hoffmann)	RMS-NR
MSN1200EL	(Bower)	NUP200
MSN1300EL	(Bower)	NUP300
MS-P	(Hoffmann)	RMS-Z
MS-P	(Pollard)	RMS-RS
MS-PP	(Hoffmann)	RMS-ZZ
MS-PP	(Pollard)	RMS-2RS
MS-RS	(Hoffmann)	RMS-RS
MS-RSS	(Hoffmann)	RMS-2RS
MST	(Sealmaster)	UCSTX or UCTX
MST	(RHP)	UCSTX
MST1000-K	(RHP)	UKTX
MS-Z	(Pollard)	RMS-Z
MS-ZZ	(Pollard)	RMS-ZZ
MU1200CL	(Bower)	N200
MU1200DL	(Bower)	NF200
MU1300CL	(Bower)	N300
MU1300DL	(Bower)	NF300
MU200	(Rollway)	NUP200
MU300	(Rollway)	NUP300
MUC200	(Rollway)	NU200
MUC300	(Rollway)	NU300
MUL200	(Rollway)	NJ200
MUL300	(Rollway)	NJ300
N	(RIV)	E
N1000	(RHP)	N1000
N1800	(Fafnir)	51200
N200	(FAG, Koyo, Nachi, NSK, NTN, SKF, SRO, Steyr)	N200
N200	(RHP)	N200
N200B	(SNR)	N200
N200E/M6	(Steyr)	N200EM
N200E/TGP	(Steyr)	N200ETN
N200ECM	(SKF)	N200EM
N200ECP	(SKF)	N200ETN
N200EM	(RHP)	N200EM
N200ETN	(RHP)	N200ETN
N200TVP2	(FAG)	N200ETN
N300	(FAG, Koyo, Nachi, NSK, NTN, SKF, SRO, Steyr)	N300
N300	(RHP)	N300
N300B	(SNR)	N300
N300E/M6	(Steyr)	N300EM
N300E/TGP	(Steyr)	N300ETN
N300ECM	(SKF)	N300EM
N300ECP	(SKF)	N300ETN
N300EM	(RHP)	N300EM
N300ETN	(RHP)	N300ETN
N300TVP2	(FAG)	N300ETN
NA200	(FYH)	HC
NANF200	(FYH)	HCFS
NANFL200	(FYH)	HCFT
NAP200	(FYH)	HCPE
NAPK200	(FYH)	HCAK
NASL200	(FYH)	HCAK
NAT-E	(FYH)	HCST
ND	(NDH)	E
NF200	(FAG, Nachi, NSK, NTN, SKF, SRO)	NF200
NF200	(RHP)	NF200
NF200E/M6	(Steyr)	NF200EM
NF200E/TGP	(Steyr)	NF200ETN
NF200ECM	(SKF)	NF200EM
NF200ECP	(SKF)	NF200ETN
NF200EM	(RHP)	NF200EM
NF200ETN	(RHP)	NF200ETN
NF200TVP2	(FAG)	NF200ETN
NF300	(FAG, NSK, NTN, SKF, SRO)	NF300

INTERCHANGE

SERIES	MANUFACTURER	KML
NF300	(RHP)	NF300
NF300E/M6	(Steyr)	NF300EM
NF300E/TGP	(Steyr)	NF300ETN
NF300ECM	(SKF)	NF300EM
NF300ECP	(SKF)	N300ETN
NF300EM	(RHP)	NF300EM
NF300ETN	(RHP)	NF300ETN
NF300TVP2	(FAG)	N200ETN
NJ200	(FAG, Koyo, Nachi, NSK, NTN, SKF, SRO, Steyr)	NJ200
NJ200	(RHP)	NJ200
NJ200B	(SNR)	NJ200
NJ200E/M6	(Steyr)	NJ200EM
NJ200E/TGP	(Steyr)	NJ200ETN
NJ200ECM	(SKF)	NJ200EM
NJ200ECP	(SKF)	NJ200ETN
NJ200EM	(RHP)	NJ200EM
NJ200ETN	(RHP)	NJ200ETN
NJ200TVP2	(FAG)	NJ200ETN
NJ300	(FAG, Koyo, Nachi, NSK, NTN, SKF, SRO, Steyr)	NJ300
NJ300	(RHP)	NJ300
NJ300B	(SNR)	NJ300
NJ300E/M6	(Steyr)	NJ300EM
NJ300E/TGP	(Steyr)	NJ300ETN
NJ300ECM	(SKF)	NJ300EM
NJ300ECP	(SKF)	NJ300ETN
NJ300EM	(RHP)	NJ300EM
NJ300ETN	(RHP)	NJ300ETN
NJ300TVP2	(FAG)	NJ300ETN
NLDJ	(R&M)	2200
NLJ	(R&M)	1200
NMDJ	(R&M)	2300
NMJ	(R&M)	1300
NP	(Sealmaster)	UCPE
NP	(RHP)	UCPE
NP-1000-K	(RHP)	UKP
NP-A	(RHP)	SBPE
NP-DEC	(RHP)	HCPE
NP-EC	(RHP)	SAPE
NU200	(FAG, Koyo, Nachi, NSK, NTN, SKF, SRO, Steyr)	NU200
NU200	(RHP)	NU200
NU200B	(SNR)	NU200
NU200E/M6	(Steyr)	NU200EM
NU200E/TGP	(Steyr)	NU200ETN
NU200ECM	(SKF)	NU200EM
NU200ECP	(SKF)	NU200ETN
NU200EM	(RHP)	NU200EM
NU200ETN	(RHP)	NU200ETN
NU200TVP2	(FAG)	NU200ETN
NU2200	(FAG, Koyo, Nachi, NSK, NTN, Rollway, SKF, SRO, Steyr)	NU2200
NU2200	(RHP)	NU2200
NU2300	(FAG, Koyo, Nachi, NSK, NTN, Rollway, SKF, SRO, Steyr)	NU2300
NU2300	(RHP)	NU2300
NU300	(FAG, Koyo, Nachi, NSK, NTN, SKF, SRO, Steyr)	NU300
NU300	(RHP)	NU300
NU300E/M6	(Steyr)	NU300EM
NU300E/TGP	(Steyr)	NU300ETN
NU300ECM	(SKF)	NU300EM
NU300ECP	(SKF)	NU300ETN
NU300EM	(RHP)	NU300EM
NU300ETN	(RHP)	NU300ETN
NU300TVP2	(FAG)	NU300ETN
NUP200	(FAG, SKF, Steyr)	NUP200
NUP200	(RHP)	NUP200
NUP200B	(SNR)	NUP200
NUP200E/M6	(Steyr)	NUP200EM
NUP200E/TGP	(Steyr)	NUP200ETN
NUP200ECM	(SKF)	NUP200EM

SERIES	MANUFACTURER	KML
NUP200ECP	(SKF)	NUP200ETN
NUP200EM	(RHP)	NUP200EM
NUP200ETN	(RHP)	NUP200ETN
NUP200TVP2	(FAG)	NUP200ETN
NUP300	(FAG, SKF, Steyr)	NUP300
NUP300	(RHP)	NUP300
NUP300B	(SNR)	NUP300
NUP300E/M6	(Steyr)	NUP300EM
NUP300E/TGP	(Steyr)	NUP300ETN
NUP300ECM	(SKF)	NUP300EM
NUP300ECP	(SKF)	NUP300ETN
NUP300EM	(RHP)	NUP300EM
NUP300TVP2	(FAG)	NUP300ETN
P200	(Pollard)	1200
P204RR6	(Fafnir)	Z9504RST
P300	(Pollard)	1300
P3200	(Pollard)	2200
P3300	(Pollard)	2300
P3Y200N	(Link Belt)	HCPE
PAK	(INA)	SAAK
PAKY	(INA)	SAAK
PASE	(INA)	SAPE
PASEY	(INA)	SBPE
PB	(Fafnir, INA)	SAPP
PB	(Koyo)	SB200G
PB220	(Browning)	HCAK
PB221	(Browning)	HCPE
PB250	(Browning)	UCAK
PB251	(Browning)	UCPE
PB350	(Browning)	UCPX
PBY	(INA)	SBPP
P-CA	(SKF)	SAPP
PCJ	(INA)	SAF
PCJT	(INA)	SAFL
PCJTY	(INA)	SBFL
PCJY	(INA)	SBF
PDF150/9	(RHP)	W210PP4
PDF150\1-15/16	(RHP)	W210PP2
PDF155/12	(RHP)	W211PP3
PDF155\2-3/16	(RHP)	W211PP2
PDF240/8	(RHP)	W208PP9
PDF240/9	(RHP)	W208PP8
PDNF140\1-3/16	(RHP)	W208PPB4
PDNF145-45	(RHP)	W209PPB2
PDNF150/9	(RHP)	W210PPB4
PDNF150\1-15/16	(RHP)	W210PPB2
PDNF155/12	(RHP)	W211PPB3
PDNF155\2-3/16	(RHP)	W211PPB2
PDNF240/8	(RHP)	W208PPB9
PDNF240/9	(RHP)	W208PPB8
PDNF245/10	(RHP)	W209PPB5
PDNF250/9	(RHP)	W210PPB6
PE	(NDH)	SAAK
PF-A	(Koyo)	SAPF
PF-CA	(SKF)	SAPF
PFD-FM	(SKF)	SAPFT
PFD-TM	(SKF)	UCPFT
PFD-WM	(SKF)	HCPFT
PF-FM	(SKF)	SAPF
P-FJ	(SKF)	SAPP
PF-L(D)	(SKF)	UCPF
P-FM	(SKF)	SAPP
PF-M	(Koyo)	UCPF
PF-PA	(SKF)	SAPF
PFT1100B	(Koyo)	HCPF
PFT-CA	(SKF)	SAPF
PF-TF	(SKF)	UCPF
PFT-FM	(SKF)	SAPFL
PF-TM	(SKF)	UCPF
PFT-TM	(SKF)	UCPFL
PFT-W	(SKF)	HCPFL
PFT-WM	(SKF)	HCPFL
PF-WM	(SKF)	HCPF
PHE	(INA)	SAHA

INTERCHANGE

SERIES	MANUFACTURER	*KML*
P-L(D)	(SKF)	UCPP
PL3Y200N	(Link Belt)	HCAK
PME	(INA)	SAFC
PMEY	(INA)	SBFC
PNR-R	(BCA)	SAAK
PNR-RS	(BCA)	SAPE
P-R-CA	(SKF)	SBRPP
P-R-FA	(SKF)	SBRPP
P-R-FJ	(SKF)	SARPP
P-R-L	(SKF)	UCRPP
PS	(NDH)	UCPE
PSFT	(INA)	SAFA
PSHE	(INA)	SATB
PSHEY	(INA)	SBTB
P-TF	(SKF)	UCPP
P-TM	(SKF)	UCPP
PTUE	(INA)	SAT
PTUEY	(INA)	SBT
P-W	(SKF)	HCPP
PWG-R	(BCA)	HCAK
PWG-RS	(BCA)	HCPE
P-WM	(SKF)	HCPP
R100	(Hoffmann, Pollard)	N200
R100E	(Hoffmann, Pollard)	NU200
R100F	(Hoffmann, Pollard)	NUP200
R100L	(Hoffmann, Pollard)	NF200
R100P	(Hoffmann, Pollard)	NJ200
R1200WB	(NDH)	NJ200
R1300WB	(NDH)	NJ300
R2FE	(NDH)	SAFL
R2FS	(NDH)	UCFL
R300	(Hoffmann, Pollard)	N300
R300E	(Hoffmann, Pollard)	NU300
R300F	(Hoffmann, Pollard)	NUP300
R300L	(Hoffmann, Pollard)	NJ300
R300P	(Hoffmann, Pollard)	NJ300
R4FE	(NDH)	SAF
R4FS	(NDH)	UCF
RA	(Fafnir, INA)	SAPF
RA100	(Koyo)	SA
RABR	(Fafnir, INA)	SAR
RAE-NPP	(Fafnir, INA)	CSA
RAE-NPPB	(Fafnir, INA)	SA
RAK	(Fafnir, INA)	HCAK
RAKC	(Fafnir)	UCAK
RAKY	(INA)	UCAK
RAL-NPP	(Fafnir)	CSA100
RALT	(INA)	SAPFL
RALTR	(INA)	SAPFT
RA-NPP	(Fafnir, INA)	CSA
RA-NPPB	(INA)	SA
RA-RR	(Fafnir)	CSA
RA-RRB	(Fafnir)	SA
RAS	(Fafnir)	HCPE
RAS4508AE	(NDH)	GW208PPB6
RAS4508BJ	(NDH)	GW208PPB5
RAS4508EF	(NDH)	GW208PPB8
RAS4509A	(NDH)	GW209PPB5
RAS4509BD	(NDH)	GW209PPB4
RAS4509BE	(NDH)	GW209PPB2
RAS4509EF	(NDH)	GW209PPB8
RAS4510B	(NDH)	GW210PP4
RAS4510F	(NDH)	GW210PPB4
RAS4511BD	(NDH)	GW211PP3
RAS4511BE	(NDH)	GW211PPB3
RAS4511C	(NDH)	GW211PP2
RASC	(Fafnir)	UCPE
RASE	(INA)	HCPE
RASEY	(INA)	UCPE
RAT	(Fafnir)	SAPFL
RATR	(Fafnir	SAPFT
RATRY	(INA)	SBPFT
RATY	(INA)	SBPFL
RAY	(INA)	SBPF
RB	(INA)	HCPP

SERIES	MANUFACTURER	*KML*
RB200	(FYH)	UC
RBY	(INA)	UCPP
RC	(Fafnir)	HCC
RCC	(Fafnir)	UCC
RCE	(Fafnir)	HCC
RCJ	(Fafnir, INA)	HCFS
RCJC	(Fafnir)	UCF
RCJSP	(Fafnir)	UCF
RCJT	(Fafnir, INA)	HCFT
RCJTC	(Fafnir)	UCFL
RCJTE	(Fafnir)	HCFT
RCJTP	(Fafnir)	UCFL
RCJTY	(INA)	UCFL
RCJY	(INA)	UCF
RCR	(Fafnir, PEER, INA)	RCR
RCSM	(Fafnir, PEER, INA)	RCSM
RFC	(Fafnir)	UCFCS
RFM	(SKF)	RCSM
RHCM	(Fafnir)	UCHA
RHE	(INA)	HCHA
RHEY	(INA)	UCHA
RHPE	(NDH)	SAPE
RHPS	(NDH)	UCPE
RLS	(Koyo, Nachi, NTN, SKF,	RLS
RLS-2RS	(SKF)	RLS-2RS
RLS-2Z	(SKF)	RLS-ZZ
RLS-RS	(SKF)	RLS-RS
RLS-Z	(SKF)	RLS-ZZ
RME	(INA)	HCFC
RMEY	(INA)	UCFC
RMNE	(Fafnir)	HCFC
RMNEY	(Fafnir)	UCFC
RMS	(Koyo, Nachi, NTN, SKF,	RMS
RPB	(Fafnir)	SARPP
RPE	(NDH)	SAAK
RPS	(NDH)	UCAK
RR	(INA)	HCPF
RRC	(Fafnir)	UCPF
RRT	(Fafnir, INA)	HCPFL
RRTR	(INA)	HCPFT
RRTRY	(INA)	UCPFT
RRTY	(INA)	UCPFL
RRY	(INA)	UCPF
RSA	(Fafnir)	HCPE
RSHE	(Fafnir, INA)	HCTB
RSHEY	(INA)	UCTB
RTU	(Fafnir)	HCST
RTUE	(Fafnir, INA)	HCT
RTUEY	(INA)	UCT
RTUP	(Fafnir)	UCST
RUBRE-100	(Browning)	RCSM
S	(Hoffmann)	R
SA200	(FYH)	SA
SA200	(NBR)	SA200G
SA200F	(FYH)	SA200G
SAA200	(FYH)	CSA
SAF200	(NBR)	SAPF
SAF-FE	(FYH)	SAF
SAFL200	(NBR)	SAPFL
SAFL-FE	(FYH)	SAFL
SAK	(Fafnir)	SBAK
SAP200	(FYH)	SAPE
SAP200	(NBR)	SAPP
SAPF200	(FYH)	SAPF
SAPFL200	(FYH)	SAPFL
SAPP200F	(FYH)	SAPP
SARPP200	(FYH)	SARPP
SAS	(Fafnir)	SBPE
SASL200F	(FYH)	SAAK
SB16200	(FAG)	SAPP
SB200	(FYH, NBR)	SB200G
SB-22200	(McGill)	22200
SB-22300	(McGill)	22300
SBB	(Nachi)	GEZ
SBF200	(NBR)	SBPF
SBFL200	(NBR)	SBPFL
SBP200	(NBR)	SBPP

INTERCHANGE

SERIES	MANUFACTURER	KML
SBPF200	(FYH)	SBPF
SBPFL200	(FYH)	SBPFL
SBPP200F	(FYH)	SBPP
SC	(FYH)	CS
SC	(Dodge)	UCPE
SC	(Sealmaster)	UCC
SC045IIC3	(NTN)	Z9504RST
SC16200	(FAG)	SAPE
SC200	(FYH)	CS200DDU
SCB	(Dodge)	UCAK
SCHB	(RHP)	UCHA
SCJ	(Fafnir)	SBF
SCJT	(Fafnir)	SBFL
SER	(Asahi)	SER
SF	(Torrington)	GEZ
SF	(Sealmaster)	UCF
SF	(RHP)	UCF
SF-A	(RHP)	SBF
SF-DEC	(RHP)	HCFS
SF-EC	(RHP)	SAF
S-FM	(SKF)	SAPP
SFT	(Sealmaster)	UCFL
SFT	(RHP)	UCFL
SFT-A	(RHP)	SBFL
SFT-DEC	(RHP)	HCFT
SFT-EC	(RHP)	SAFL
SG36200	(FAG)	HCPE
SG56200	(FAG)	UCPE
SL	(Sealmaster)	CSB
SL	(FYH)	UCAK
SL	(RHP)	UCAK
SLC	(RHP)	UCC
SLC-DEC	(RHP)	HCC
SL-DEC	(RHP)	HCAK
SLE-100	(Browning)	CSA
SL-EC	(RHP)	SAAK
SLFE	(RHP)	UCPF
SLFE-A	(RHP)	SBPF
SLFE-DEC	(RHP)	HCPF
SLFE-EC	(RHP)	SAPF
SLFL	(RHP)	UCPFL
SLFL-A	(RHP)	SBPFL
SLFL-DEC	(RHP)	HCPFL
SLFL-EC	(RHP)	SAPFL
SLFT	(RHP)	UCPFT
SLFT-DEC	(RHP)	HCPFT
SLFT-EC	(RHP)	SAPFT
SLG	(Sealmaster)	UCAK
SLPE-A	(RHP)	SBPF
SLS-100	(Browning)	CSB
SN100	(FBC)	6000RS
SN200	(FBC)	6200RS
SN2000	(FBC)	RLS-RS
SN300	(FBC)	6300RS
SN3000	(FBC)	RMS-RS
SNP	(RHP)	UCTB
SNP-A	(RHP)	SBTB
SNP-DEC	(RHP)	HCTB
SNP-EC	(RHP)	SATB
SP	(Koyo)	SBPP
SP100A	(Koyo)	SAPP
SRBRPP200	(FYH)	SBRPP
SRC	(Sealmaster)	RCSM
SR-FM	(SKF)	SARPP
SRP	(Sealmaster)	UCRPP
SSF	(Sealmaster)	UCPF
SSF2E-100	(Browning)	SAPFL
SSF2S-100	(Browning)	SBPFL
SSF3E-100	(Browning)	SAPF
SSF3S-100	(Browning)	SBPF
SSF3TE-100	(Browning)	SAPFT
SSF3TS-100	(Browning)	SBPFT
SSF4E-100	(Browning)	SAPF
SSF4S-100	(Browning)	SBPF

SERIES	MANUFACTURER	KML
SSF-E	(Sealmaster)	SAPF
SSFF	(Sealmaster)	SBPF
SSFF-E	(Sealmaster)	SAPF
SSFT	(Sealmaster)	SBPFL
SSFT-E	(Sealmaster)	SAPFL
SSP	(Sealmaster)	UCPP
SSP-E	(SKF)	SAPP
SSPE-100	(Browning)	SAPP
SSPS-100	(Browning)	SBPP
SSRPE-100	(Browning)	SARPP
SSRPS-100	(Browning)	SBRPP
ST	(Sealmaster)	UCST
ST	(RHP)	UCST
ST-A	(RHP)	SBST
ST-DEC	(RHP)	HCST
ST-EC	(RHP)	SAST
SX	(Dodge)	HCPE
SYB-FM	(SKF)	SAAK
SYB-L(D)	(SKF)	UCAK
SYB-TM	(SKF)	UCAK
SYB-WM	(SKF)	HCAK
SY-CB	(SKF)	SAPE
SYF-FM	(SKF)	SATB
SY-FM	(SKF)	SAPE
SYF-TF	(SKF)	UCTB
SYF-WM	(SKF)	HCTB
SYH-CB	(SKF)	SAAK
SYH-X	(SKF)	HCAK
SY-TF	(SKF)	UCPE
SY-TM	(SKF)	UCPE
SY-W	(SKF)	HCPE
SY-WM	(SKF)	HCPE
TB	(SKF)	UCST
TB-(C)	(Sealmaster)	UCTB
TB-CB	(SKF)	SAST
TB-X	(SKF)	HCST
TBY-TM	(SKF)	UCST
TNR-R	(BCA)	SAFL
TSSF	(Sealmaster)	SBPFT
TSSF-E	(Sealmaster)	SAPFT
TU-FJ	(SKF)	SAST
TU-FM	(SKF)	SAST
TU-L(D)	(SKF)	UCST
TU-S(D)	(SKF)	UCST
TU-TF	(SKF)	UCST
TU-TM	(SKF)	UCST
TU-WM	(SKF)	HCST
U100	(Hoffmann)	1200
U100W	(Hoffmann)	2200
U300	(Hoffmann)	1300
U300W	(Hoffmann)	2300
UB200	(NSK)	SB200G
UBF200	(NSK)	SBF
UBFC200	(NSK)	SBFC
UBFD200	(NSK)	SBFD
UBFL200	(NSK)	SBFL
UBLF200	(NSK)	SBLF
UBP200	(NSK)	SBPE
UBPA200	(NSK)	SBPA
UBPF200	(NSK)	SBPF
UBPP200	(NSK)	SBPP
UBPPR200	(NSK)	SBRPP
UC200	(Asahi, FYH, Koyo, Nachi, NBR, NSK, NTN)	UC
UCC200	(NTN, NSK)	UCC
UCEH200	(NSK)	UCHA
UCF200	(Asahi, FYH, Koyo, Nachi, NBR, NSK, NTN)	UCF
UCFA200	(NTN, NSK)	UCFA
UCFC200	(Koyo, NSK, NTN)	UCFC
UCFCF200	(FYH)	UCFC
UCFH200	(NTN)	UCFB
UCFK200	(NSK)	UCFB

INTERCHANGE

SERIES	MANUFACTURER	KML
UCFL200	(Asahi, FYH, Koyo, Nachi, NBR, NSK, NTN)	UCFL
UCFLX	(Asahi, FYH, Koyo, NSK)	UCFLX
UCFX	(Asahi, FYH, Koyo, NSK)	UCFX
UCHA200	(FYH)	UCHA
UCHB	(NTN)	UCHA
UCLF200(U)	(Asahi)	UCF
UCLP200(U)	(Asahi)	UCAK
UCP200	(Asahi, FYH, Koyo, Nachi, NBR, NSK, NTN)	UCPE
UCPA200	(FYH, Koyo, NSK)	UCPA
UCPX	(Asahi, FYH, Koyo, NSK)	UCPX
UCS200	(NTN)	SER
UCS200N	(FYH)	SER
UCST200(U)	(Asahi)	UCST
UCT200	(Asahi, Koyo, Nachi, NBR, NSK, NTN)	UCT
UCT-E	FYH	UCST
UCTX	(Asahi, FYH, Koyo, NSK)	UCTX
UCW200	(Asahi)	UC
UCX	(Asahi, FYH, Koyo, NSK)	UCX
UD200EEA	(Asahi)	SA200G
UDF200A	(Asahi)	SAF
UDFL200B	(Asahi)	SAFL
UDT200A	(Asahi)	SAPE
UDT200B	(Asahi)	SAST
UEL200	(NTN)	HC
UELC200	(NTN)	HCC
UELF200	(NTN)	HCF
UELFC200	(NTN)	HCFC
UELFL200	(NTN)	HCFL
UELFLU200	(NTN)	HCFT
UELFU	(NTN)	HCFS
UELP200	(NTN)	HCPE
UELPL200	(NTN)	HCAK
UELT200	(NTN)	HCT
UELUP200	(NTN)	HCPA
UH200ER(U)	(Asahi)	SA
UK200	(FYH, Koyo, Nachi, NBR, NSK, NTN)	UK
UKF200	(FYH, Nachi, NBR, NSK, NTN)	UKF
UKFL200	(FYH, Koyo, NBR, NSK, NTN)	UKFL
UKP200	(FYH, Koyo, Nachi, NBR, NSK, NTN)	UKP
UKT200	(FYH, Koyo, NSK, NTN)	UKT
UR200	(NSK)	SER
VAK	(Fafnir)	SAAK
VAS	(Fafnir)	SAPE
VCJ	(Fafnir)	SAF
VCJT	(Fafnir)	SAFL
VE-100	(Browning)	SA
VE-200	(Browning)	HC
VER-200	(Browning)	SER
VF2E-100	(Browning)	SAFL
VF2E-100M	(Browning)	SALF
VF2E-200	(Browning)	HCFT
VF2S-100	(Browning)	SBFL
VF2S-100M	(Browning)	SBLF
VF2S-200	(Browning)	UCFL
VF3E-100	(Browning)	SARFT
VF3S-100M	(Browning)	SBRFT
VF4E-100	(Browning)	SAF
VF4E-200	(Browning)	HCFS
VF4S-100	(Browning)	SBF
VF4S-200	(Browning)	UCF
VFCS-200	(Browning)	UCFCS
VMNE	(Fafnir)	SAFC
VPE-100	(Browning)	SAPE
VPE-200	(Browning)	HCPE
VPLE-100	(Browning)	SAAK
VPLE-200	(Browning)	HCAK
VPLS-100	(Browning)	SBAK
VPLS-200	(Browning)	UCAK
VPS-100	(Browning)	SBPE
VPS-200	(Browning)	UCPE
VS-100	(Browning)	SB

SERIES	MANUFACTURER	KML
VS-200	(Browning)	UC
VSHE	(Fafnir)	SATB
VTB	(Fafnir)	SATB
VTBE	(Browning)	SATB
VTBS-200	(Browning)	UCTB
VTU	(Fafnir)	SAST
VTWE-100	(Browning)	SAST
VTWE-200	(Browning)	HCST
VTWS-100	(Browning)	SBST
VTWS-200	(Browning)	UCST
W208PP10	(Fafnir)	W208PP10
W208PP5	(Fafnir)	W208PP5
W208PP6	(Fafnir)	W208PP6
W208PP8	(Fafnir)	W208PP8
W208PP9	(Fafnir)	W208PP9
W208PPB13	(Fafnir)	W208PPB13
W208PPB2	(Fafnir)	W208PPB2
W208PPB4	(Fafnir)	W208PPB4
W208PPB5	(Fafnir)	W208PPB5
W208PPB6	(Fafnir)	W208PPB6
W208PPB7	(Fafnir)	W208PPB7
W208PPB8	(Fafnir)	W208PPB8
W208PPB9	(Fafnir)	W208PPB9
W209PPB2	(Fafnir)	W209PPB2
W209PPB4	(Fafnir)	W209PPB4
W209PPB5	(Fafnir)	W209PPB5
W209PPB8	(Fafnir)	W209PPB8
W210PP2	(Fafnir)	W210PP2
W210PP4	(Fafnir)	W210PP4
W210PPB2	(Fafnir)	W210PPB2
W210PPB4	(Fafnir)	W210PPB4
W210PPB5	(Fafnir)	W210PPB5
W210PPB6	(Fafnir)	W210PPB6
W211PP2	(Fafnir)	W211PP2
W211PP3	(Fafnir)	W211PP3
W211PPB2	(Fafnir)	W211PPB2
W211PPB3	(Fafnir)	W211PPB3
XM	(FBC)	6000
XM-PP	(FBC)	6000-ZZ
XX1 OOZ	(Pollard)	6000Z
XX1 OOZZ	(Pollard)	6000-ZZ
XX100	(Pollard)	6000
XX100C	(Pollard)	6000N
XX100C(W/C)	(Pollard)	6000NR
XX100P	(Pollard)	6000RS
XX100PP	(Pollard)	6000-2RS
XXLJ	(R&M)	6000
XXLJ-D	(R&M)	6000Z
XXLJ-DD	(R&M)	6000-ZZ
XXLJ-G	(R&M)	6000N
XXLJ-GWC	(R&M)	6000NR
XXLJT	(R&M)	7000
XXLJ-WSR	(R&M)	6000RS
XXLJ-WSRR	(R&M)	6000-2RS
XXLRJ	(R&M)	N1000
YA-RR	(Fafnir)	CSB
YA-RRB	(Fafnir)	SB
YAK	(Fafnir)	UCAK
YAR200	(SKF)	UC
YAT200	(SKF)	SB200G
YAT200CW	(SKF)	CSB200
YAT200W	(SKF)	SB200
YEL200	(SKF)	HC
YET200	(SKF)	SA200G
YET200CW	(SKF)	CSA200
YET200W	(SKF)	SA200
YTU	(Fafnir)	UCST
Z93LOO	(NDH)	6000RS
Z9500	(NDH)	6200RS
Z9504-2RST	(PEER)	Z9504RST
Z9504AB	(BCA, Fafnir, PEER)	Z9504AB
Z9600	(NDH)	6300RS
Z993LOO	(NDH)	6000-2RS
Z99500	(NDH)	6200-2RS
Z99600	(NDH)	6300-2RS